

A general solution for active and passive earth pressures
by William Smith Hartsog

A thesis submitted to the Graduate Faculty in partial fulfillment of the requirements for the degree of MASTER OF SCIENCE in Civil Engineering
Montana State University
© Copyright by William Smith Hartsog (1968)

Abstract:
The Rankine assumptions were used as a basis to develop equations for active and passive earth pressures within a slope having an infinite extent. The analysis includes: cohesive and noncohesive soils; the angle of internal friction of the soil; seepage forces caused by a ground-water table which is parallel to the ground surface; and the plane on which the stresses are to be found may be at any inclination.

The equations for active and passive pressures were nondimension alized to reduce the number of parameters and aid in programming the expressions for solution on an IBM 1620, Model II, digital computer.

The program systematically varies the parameters in order to develop tables which simplify the solution for a variety of soil properties and slope geometry. The dimensional equations were also programmed for solution for a specific set of soil properties and slope geometry.

1098-1

A GENERAL SOLUTION FOR ACTIVE AND PASSIVE EARTH PRESSURES

by

WILLIAM SMITH HARTSOG

A thesis submitted to the Graduate Faculty in partial fulfillment of the requirements for the degree

of

MASTER OF SCIENCE

in

Civil Engineering

Approved:

Head, Major Department

Chairman, Examining Committee

Graduate Dean

MONTANA STATE UNIVERSITY
Bozeman, Montana

August, 1968

ACKNOWLEDGEMENT

The author wishes to express his gratitude to the faculty of the Civil Engineering and Engineering Mechanics department at Montana State University for their assistance. Special appreciation is extended to Dr. Glen L. Martin for his guidance and assistance in conducting this study and preparing this thesis.

Appreciation is extended to the staff of the Intermountain Forest and Range Experiment Station, especially to Mr. Michael J. Gonsior, for their assistance and cooperation.

Appreciation is extended to Mrs. Ruthann Hartsog, the author's wife, for typing this paper.

TABLE OF CONTENTS

Chapter		Page
I	INTRODUCTION	1
II	STRESS RELATIONSHIPS ON A PLANE PARALLEL TO THE GROUND SURFACE WITHIN AN INFINITE SLOPE	2
	Infinite Slope	2
	Elemental Volume of Soil	2
	Normal and Tangential Stresses	7
	Neutral Stress	10
	Effective Stresses	10
	Obliquity Angles	11
III	MOHR'S CIRCLE OF STRESSES	15
	Sign Conventions	15
	Mohr's Coordinates	15
	Coulomb's Equation	15
	Mohr Rupture Envelope	15
	Active Stress	18
	Passive Stress	18
	Origin of Planes	18
IV	ANALYTICAL DEVELOPMENT	21
	Line Through Point of Known Stress	21
	Seepage Force Per Unit Area	23
	Radius of Stress Circle	24
	Circle of Stresses	24
	Center of Stress Circle	25
	Expressions for Origin of Planes	26
	Line Through Origin of Planes	26
	Normal Stress on Plane of Investigation	28
	Tangential Stress on Plane of Investigation	29
V	DISCUSSION	30
	Equation Compatability	30
	Critical Depth Definition	31
	Critical Depth in Cohesive Material	32
	Critical Depth in Noncohesive Material	32
	Equations for Critical Depth	34

Chapter		Page
VI	NONDIMENSIONAL FORMULATION	36
	Basic Parameters	36
	Nondimensional Equations	36
	Nondimensional Mohr's Diagram	38
	Critical Depth Nondimensional Equations	38
VII	RESULTS	41
	Dimensional Form	41
	Nondimensional Form	44
	Use of Nondimensional Tables	44
VIII	CONCLUSIONS AND RECOMMENDATIONS FOR FURTHER STUDY	48
	APPENDIX	49
	Appendix A: Dimensional Computer Program	50
	LITERATURE CONSULTED	55

LIST OF TABLES

Table		Page
I	Chronological Summary of the Development of Infinite Slope Earth Pressures	2
II	Active Stresses	42
III	Passive Stresses	43
IV	Nondimensional Active Stresses	45
V	Nondimensional Passive Stresses	46

LIST OF FIGURES

Figure		Page
1	Profile of an Infinite Slope	5
2	An Elemental Volume of Soil, AA'BB', Within an Infinite Slope	6
3	Force Components Acting on Plane A-A'	8
4	Stresses Acting on Plane A-A'	8
5	Flow Net Within an Infinite Slope	9
6	Stress Relationships for Plane A-A' Above the Water Table	12
7	Stress Relationships for Plane A-A' Below the Water Table with the Water Table Coinciding with the Ground Surface	12
8	Stress Relationships for Plane A-A' Below the Water Table with the Water Table Below the Ground Surface	13
9	Stresses on Plane A-A' Shown on Mohr's Coordinates	16
10	Mohr Diagram for Active and Passive Stress Conditions	17
11	Active State of Stress	19
12	Passive State of Stress	19
13	Active and Passive Stress Circles and Their Relationship to Mohr's Rupture Envelope	22
14	Typical Stress Circle	27
15	Stress Condition at the Critical Depth When the Unit Cohesion is Greater Than Zero	33
16	Stress Condition at the Critical Depth When the Unit Cohesion Equals Zero	33
17	Stress Relationships at Critical Depth	35
18	Nondimensional Mohr Diagram	39

ABSTRACT

The Rankine assumptions were used as a basis to develop equations for active and passive earth pressures within a slope having an infinite extent. The analysis includes: cohesive and noncohesive soils; the angle of internal friction of the soil; seepage forces caused by a groundwater table which is parallel to the ground surface; and the plane on which the stresses are to be found may be at any inclination.

The equations for active and passive pressures were nondimensionalized to reduce the number of parameters and aid in programming the expressions for solution on an IBM 1620, Model II, digital computer. The program systematically varies the parameters in order to develop tables which simplify the solution for a variety of soil properties and slope geometry. The dimensional equations were also programmed for solution for a specific set of soil properties and slope geometry.

A GENERAL SOLUTION FOR ACTIVE AND PASSIVE EARTH PRESSURES

CHAPTER I

INTRODUCTION

In 1860, Rankine presented the original development for lateral earth pressures within a slope of infinite extent. Rankine's development was based on a conjugate stress relationship between vertical stresses and stresses on a vertical plane and considered a dry cohesionless material with either a sloping or a horizontal surface. During the latter part of the nineteenth century, the Mohr circle of stresses was presented for the graphic representation of the state of stress. The analytical work of Rankine was subsequently adapted to a graphical method using the Mohr circle of stresses.

In 1915, Bell extended Rankine's work to include cohesive soils. Bell's graphical procedure made use of Mohr's stress circle, but in an inconvenient manner. Martin (1961) derived an analytical expression to extend Rankine's work to include cohesive soils, but the development includes neither seepage conditions nor a variable plane of investigation.

The development herein extends Martin's analytical development to include stresses on any plane in the slope, and includes seepage stresses in the analysis. It is assumed in the following development that seepage stresses are caused by a water table parallel to the ground surface. A chronological summary of the developments based on Rankine's assumptions is shown in Table I.

The graphical methods presently being used for the determination of

TABLE I

CHRONOLOGICAL SUMMARY OF THE DEVELOPMENT OF INFINITE SLOPE EARTH PRESSURES

	FACTORS CONSIDERED					APPROACH	
INVESTIGATOR	angle of slope	angle of internal friction	unit cohesion of the soil	angle of the plane of investigation	seepage	graphical	analytical
RANKINE	X	X		vertical			X
BELL	X	X	X	vertical		X	
MARTIN	X	X	X	vertical			X
HARTSOG	X	X	X	any	X		X

earth pressures are tedious and time consuming. The analytical expressions developed herein would also be time consuming were it not for the advent of the digital computer.

CHAPTER II

STRESS RELATIONSHIPS ON A PLANE PARALLEL TO THE GROUND SURFACE WITHIN AN INFINITE SLOPE

The term, infinite slope, is defined as a slope of constant inclination of unlimited extent. For practical purposes, a slope that has a length to depth ratio of twenty or greater has been considered an infinite slope.

The classical infinite slope analysis requires that soil properties be constant at any and all vertical sections along the slope. If this requirement is met, the slope can be studied by analyzing the stress conditions within an elemental volume of soil.

Figure 1 shows the basic assumed geometry of the infinite slope. In Figure 1, Z is the depth to the plane of investigation, Z_w is the depth to the water table, and $(Z-Z_w)$ is the vertical distance from the water table to the plane of investigation. The total unit weight of the soil material above the water table is denoted as γ_t, and γ_{sat} is the saturated unit weight of the soil. The angle the ground surface makes with the horizontal is denoted as θ. It is assumed that the planes representing the ground surface and the water table are parallel.

The slope profile with an elemental volume of soil (AA'BB') is shown in Figure 2. If a unit dimension is assumed normal to the plane of Figure 2, and if AA' is assumed to be of unit length, the resulting plane (which shall be referred to as plane A-A') will be of unit area. The force, W, acting on plane A-A', is equal to the weight of the vertical column of soil above plane A-A'.

The equation for the vertical force, W, is found by adding the

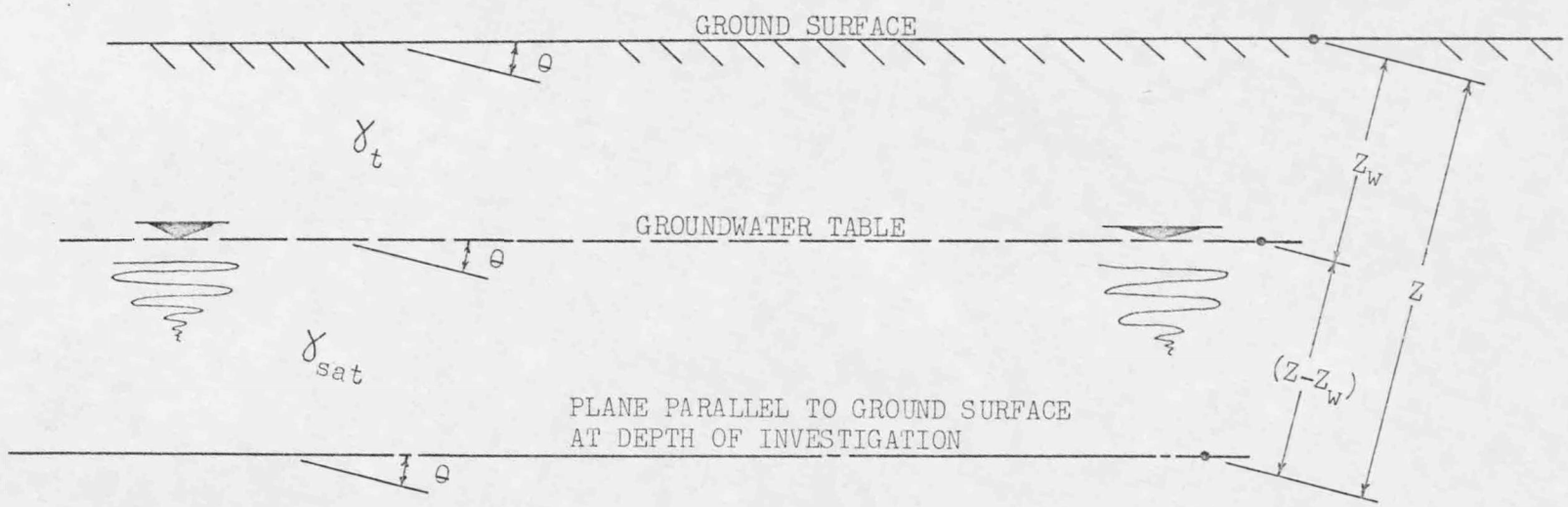

Figure 1. Profile of an infinite slope.

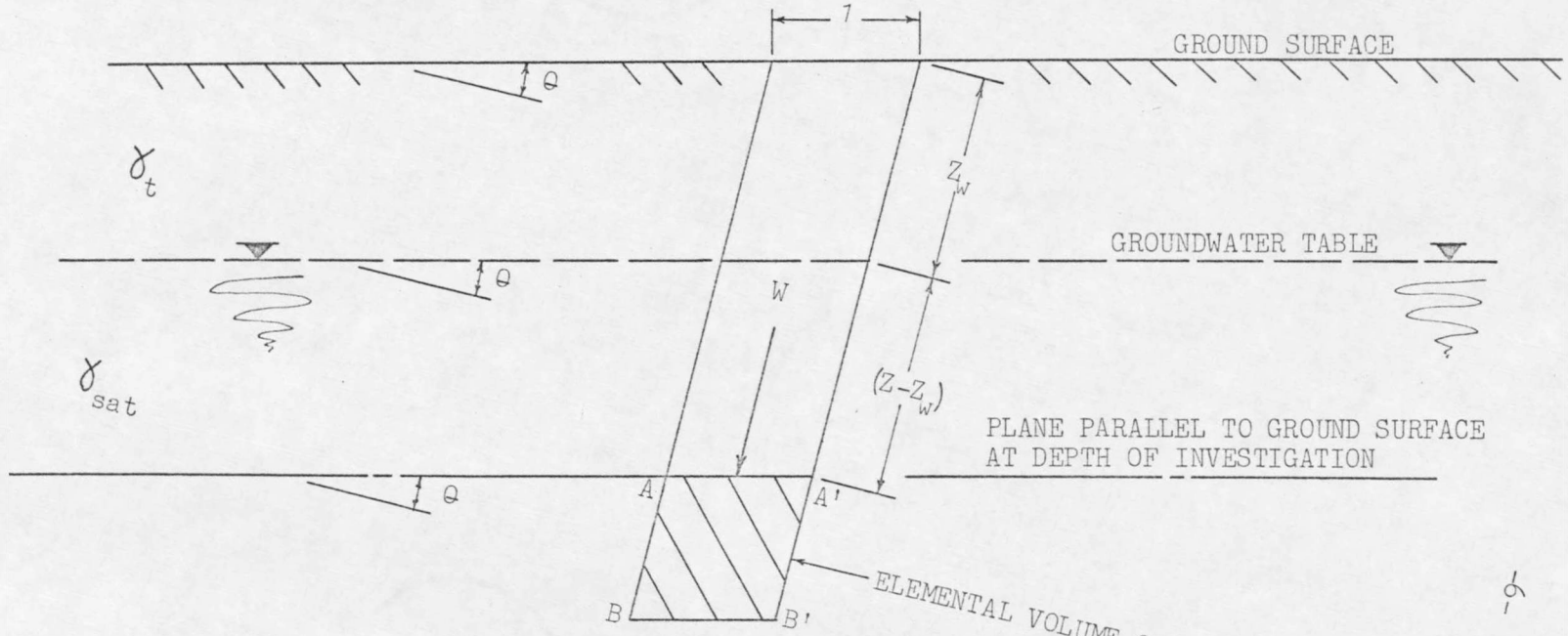

Figure 2. An elemental volume of soil, AA'BB', within an infinite slope.

products of respective unit weights and volumes within the vertical column of soil:

$$W = \gamma_t Z_w \cos\theta + \gamma_{sat}(Z-Z_w)\cos\theta \qquad (1)$$

Equation (1) is valid for the general case; that is, plane A-A' is below the groundwater table. When plane A-A' is above the groundwater table, the quantity $(Z-Z_w)$ is zero and Z_w is replaced with Z.

The vertical force, W, can be resolved into components normal (N) and tangential (T) to plane A-A', as shown in Figure 3. The expressions for the normal force and the tangential force are, therefore:

$$N = \gamma_t Z_w \cos^2\theta + \gamma_{sat}(Z-Z_w)\cos^2\theta \qquad (2)$$

$$T = \gamma_t Z_w \sin\theta\cos\theta + \gamma_{sat}(Z-Z_w)\sin\theta\cos\theta \qquad (3)$$

The normal stress, σ_a, shown in Figure 4, is equal in magnitude to the force N, because plane A-A' is of unit area. It follows, from Equation (2), that:

$$\sigma_a = \gamma_t Z_w \cos^2\theta + \gamma_{sat}(Z-Z_w)\cos^2\theta \qquad (4)$$

Similarly, the tangential stress, τ_a, is equal in magnitude to the force T. From Equation (3), the equation for τ_a can be written as:

$$\tau_a = \gamma_t Z_w \sin\theta\cos\theta + \gamma_{sat}(Z-Z_w)\sin\theta\cos\theta \qquad (5)$$

Because the analysis will be on the basis of effective stresses, it is necessary to determine the neutral stress, u. The neutral stress is found by use of a flow net, as shown in Figure 5. The pressure head along

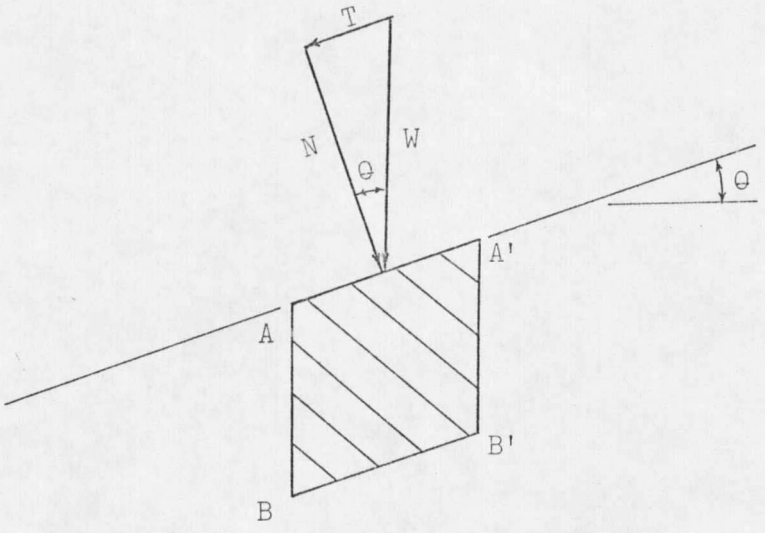

Figure 3. Force Components acting on plane A-A'.

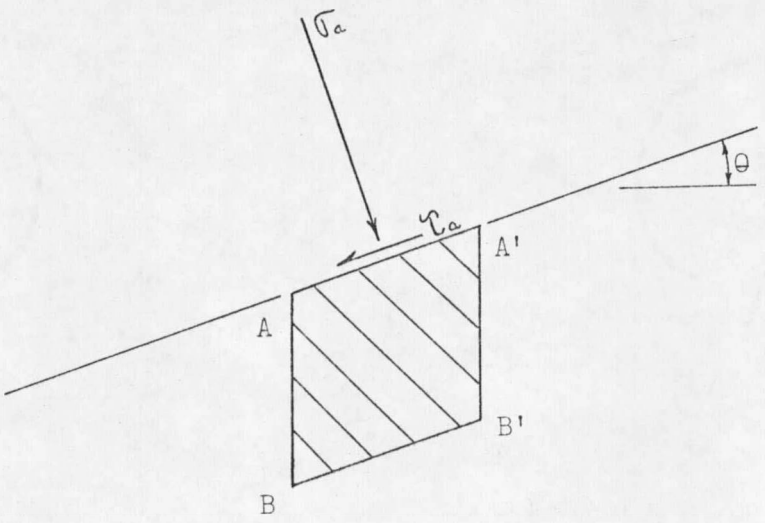

Figure 4. Stresses acting on plane A-A'.

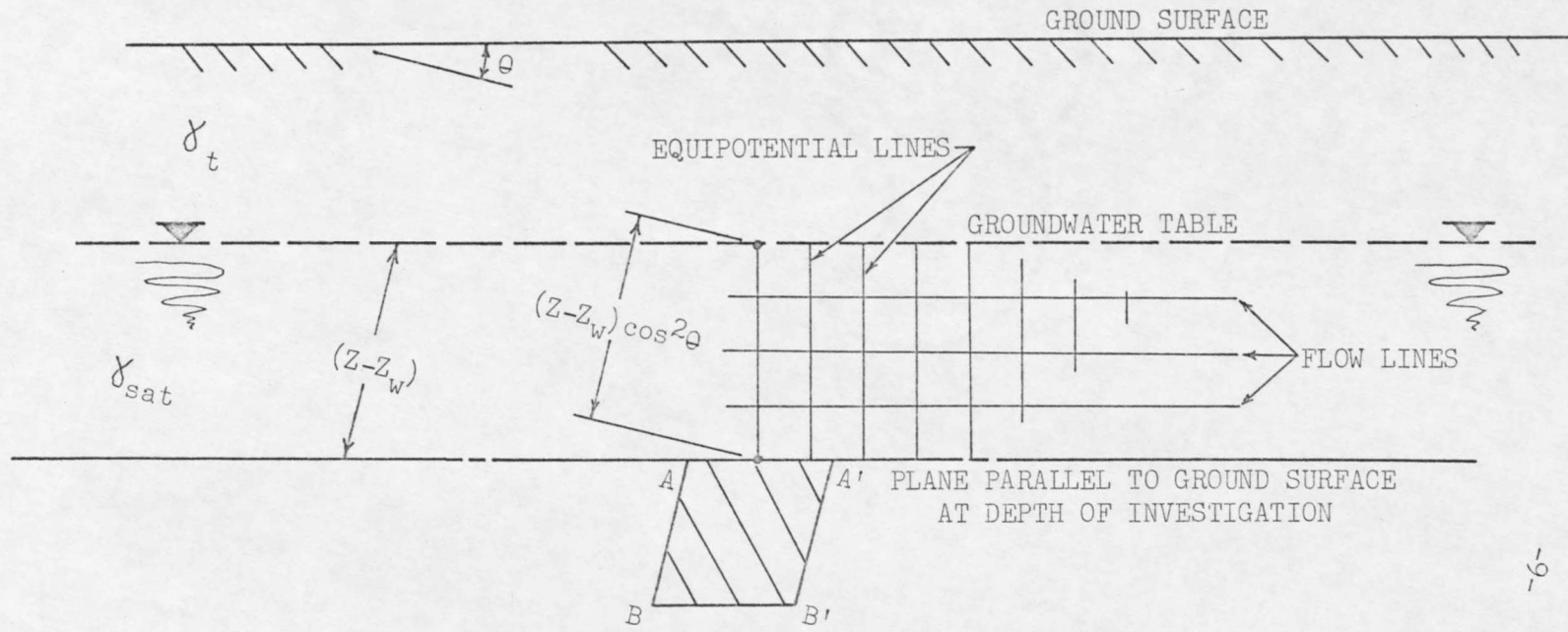

Note: hydraulic gradient $i = \sin\theta$

Figure 5. Flow net within an infinite slope.

an equipotential line is equal to $(Z-Z_w)\cos^2\theta$. The neutral stress on plane A-A' is the pressure head multiplied by the unit weight of water (γ_w):

$$u = \gamma_w (Z-Z_w)\cos^2\theta \qquad (6)$$

The effective stress, $\bar{\sigma}_a$, is found by subtracting the neutral stress from the total stress:

$$\bar{\sigma}_a = \gamma_t Z_w \cos^2\theta + \gamma_{sat}(Z-Z_w)\cos^2\theta - \gamma_w (Z-Z_w)\cos^2\theta \qquad (7)$$

Because the buoyant unit weight, γ_b, is equal to $(\gamma_{sat}-\gamma_w)$, Equation (7) can be written as:

$$\bar{\sigma}_a = \gamma_t Z_w \cos^2\theta + \gamma_b (Z-Z_w)\cos^2\theta \qquad (8)$$

Because water cannot resist shear stress at negligible velocities, the shear stress, τ_a, is not affected by the neutral stress. Equations (5) and (8) are the basic relationships for the effective stresses at a given depth and on a given plane of investigation. With this information, the stress condition ($\bar{\sigma}_a$, τ_a) may be adapted to a Mohr diagram.

Stresses cannot be added vectorially because they are not vector quantities, but because they are acting on the unit area of plane A-A', the normal and tangential stresses can be used interchangeably with normal and tangential forces. The subsequent development makes use of this resolving of stresses in order to define obliquity angles (the angle between the resultant and the normal effective stress).

There are three different conditions for which the obliquity angle

can be defined:

Case I. Plane A-A' above the water table. When plane A-A' is above the water table the angle of obliquity is equal to the slope angle, θ, as shown in Figure 6.

Case II. Plane A-A' below the water table with the water table coinciding with the ground surface. The obliquity angle, β, is defined in terms of effective stresses as shown in Figure 7. The tangent of the obliquity angle is found by dividing the tangential stress by the effective normal stress:

$$\tan\beta = \frac{\gamma_{sat}(Z-Z_w)\sin\theta\cos\theta}{\gamma_b(Z-Z_w)\cos^2\theta} \qquad (9)$$

Solving Equation (9) for the angle of obliquity, β, yields:

$$\beta = \tan^{-1}\left[\left(1+\frac{\gamma_w}{\gamma_b}\right)\tan\theta\right] \qquad (10)$$

Case III. Plane A-A' below the water table with the water table below the ground surface. For this general case, shown in Figure 8, the tangent of the obliquity angle, Ψ, is the quotient of the tangential stress and the effective normal stress:

$$\tan\Psi = \frac{\gamma_t Z_w \sin\theta\cos\theta + \gamma_{sat}(Z-Z_w)\sin\theta\cos\theta}{\gamma_t Z_w \cos^2\theta + \gamma_b(Z-Z_w)\cos^2\theta} \qquad (11)$$

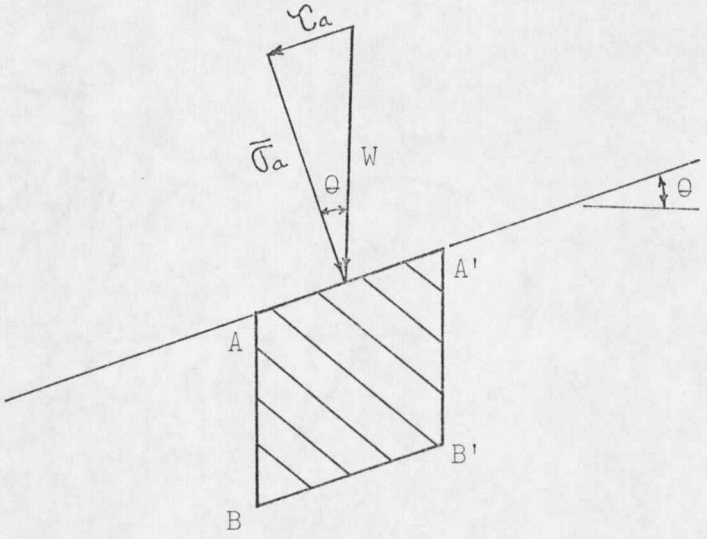

Figure 6. Stress relationships for plane A-A' above the water table.

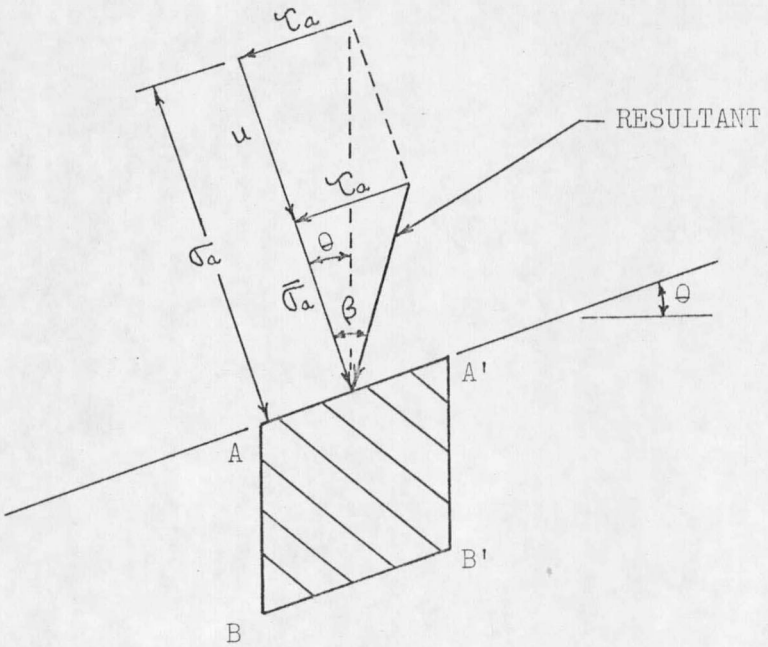

Figure 7. Stress relationships for plane A-A' below the water table with the water table coinciding with the ground surface.

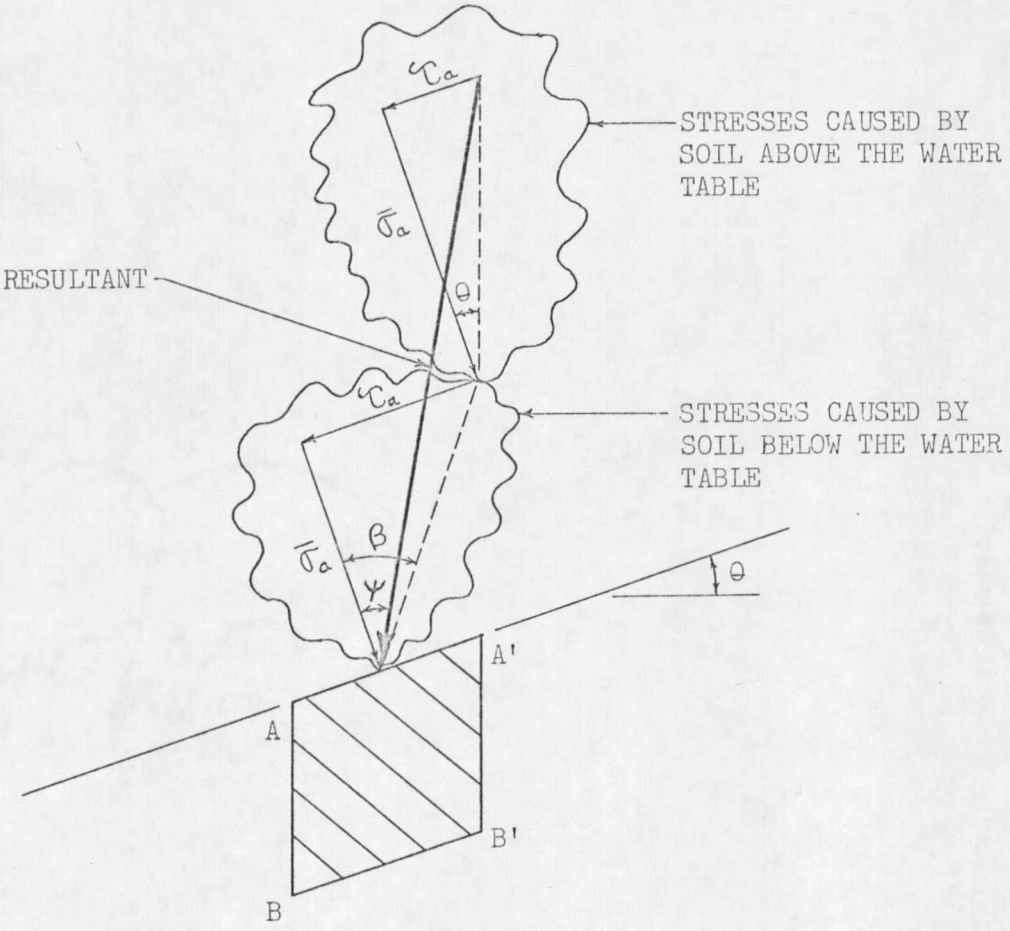

Figure 8. Stress relationships for plane A-A' below the water table with the water table below the ground surface.

Rewriting Equation (11) and solving for the obliquity angle yields:

$$\psi = \tan^{-1}\left\{\left[\frac{\gamma_t Z_w + \gamma_{sat}(Z-Z_w)}{\gamma_t Z_w + \gamma_b (Z-Z_w)}\right]\tan\theta\right\} \qquad (12)$$

CHAPTER III

MOHR'S CIRCLE OF STRESSES

The Mohr circle of stresses is used to find the state of stress on any plane perpendicular to the plane of elemental volume of soil, AA'BB', shown in Figure 2. The sign convention for stresses is that commonly used in soil mechanics, normal stresses in compression are positive and counterclockwise shear stresses are positive.

When the effective stresses, $\bar{\sigma}_a$ and τ_a, are plotted on Mohr's coordinates, the obliquities of the various components are as shown in Figure 9. Note that the stress condition on plane A-A' is a function of depth. The state of stress ($\bar{\sigma}_a$, τ_a) will lie on line DE if plane A-A' is above the water table, or on line EF if plane A-A' is below the water table. The state of stress ($\bar{\sigma}_a$, τ_a) shown in Figure 9 can be adapted to a Mohr diagram, as shown in Figure 10.

The strength characteristics of a soil material may be defined by Coulomb's equation:

$$s = c + \bar{\sigma} \tan\phi \qquad (13)$$

where: s = the shear strength of the soil material;

c = the unit cohesion;

$\bar{\sigma}$ = the normal effective stress; and

ϕ = the angle of internal friction.

Equation (13) is shown graphically in Figure 10, and this graphic illustration of Equation (13) is known as the Mohr rupture envelope. The leaves of the Mohr rupture envelope, MN and M'N', shown in Figure 10,

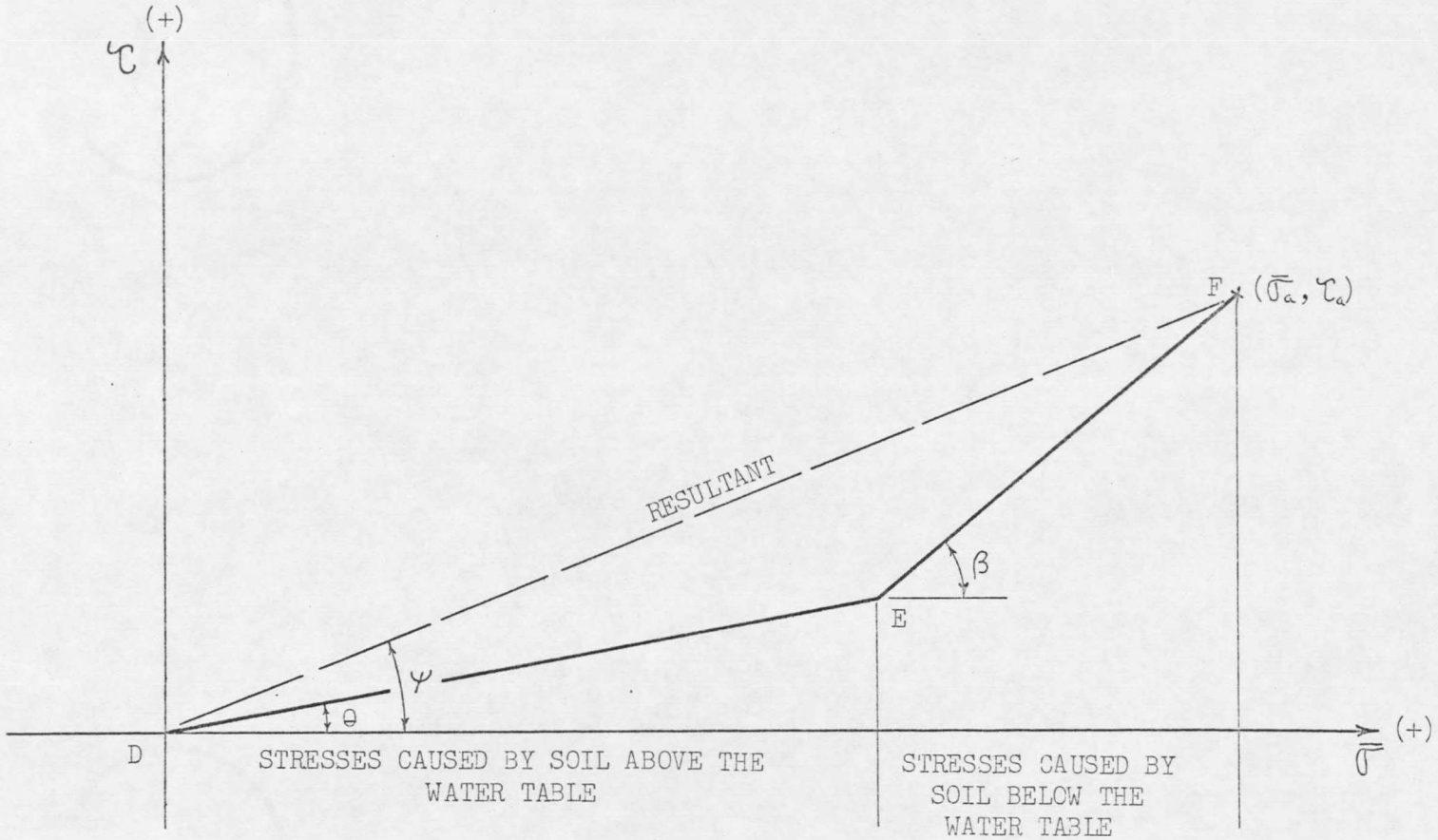

Figure 9. Stresses on plane A-A' shown on Mohr's coordinates

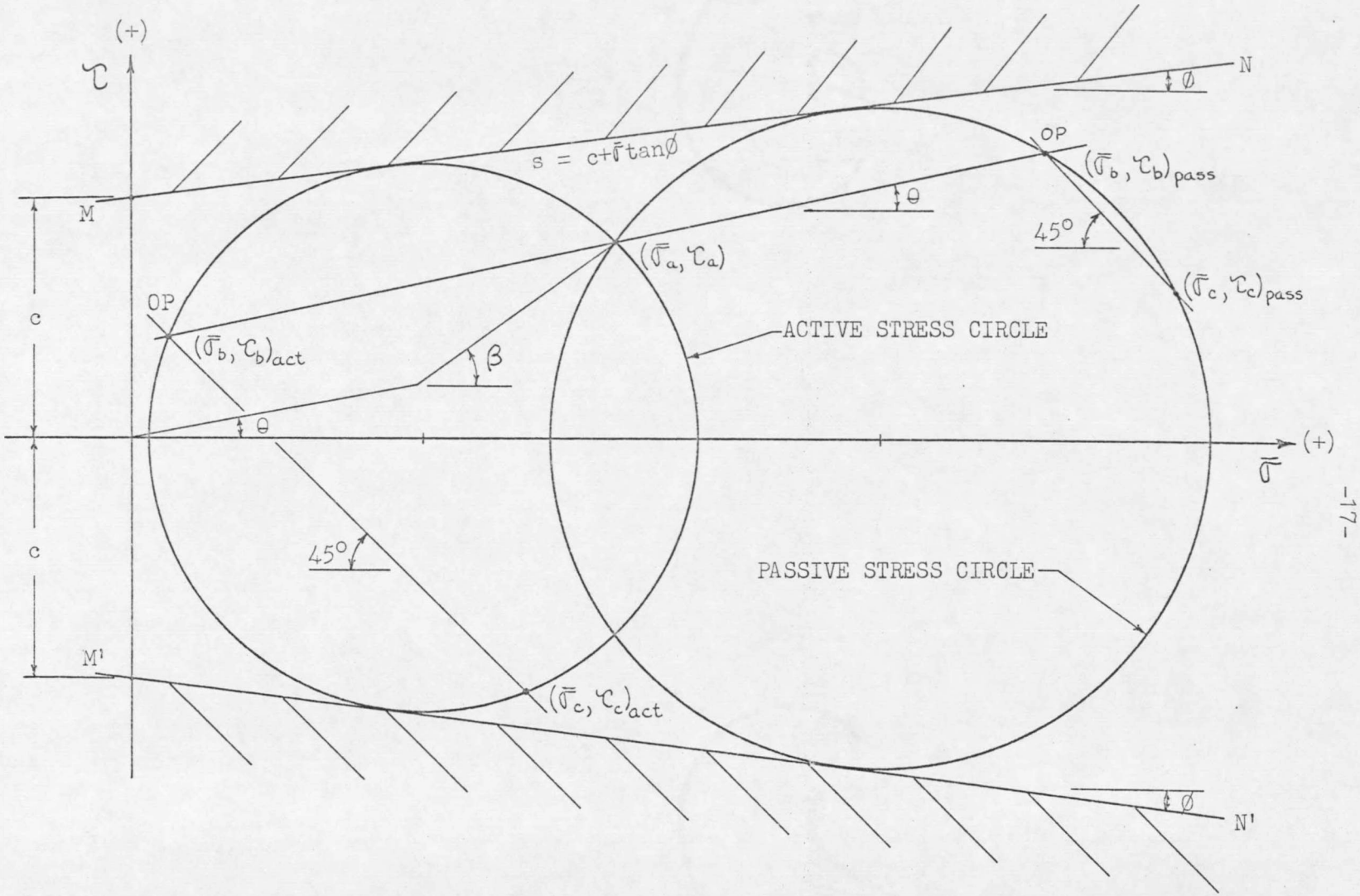

Figure 10. Mohr diagram for active and passive stress conditions.

represent the strength of the soil based on Coulomb's equation. A state of stress above MN or below M'N' will cause failure of the slope, whereas a state of stress that lies within the envelope may exist in a stable slope. The leaves of the envelope define impending failure conditions.

The main objective of this development is to find equations for two limiting values of stresses, commonly called the active and passive states of stress. When the soil is on the verge of failure it will be in a state of plastic equilibrium.

In the active case the lateral pressure is relieved and elongation occurs parallel to the direction of pressure release, as shown in Figure 11. The lateral pressure, P_a, shown in Figure 11, is the minimum which will maintain stability. This state of stress is shown by the active stress circle in Figure 10.

In the passive case the lateral pressure is increased and compression occurs parallel to the direction of pressure increase, as shown in Figure 12. The lateral pressure, P_p, shown in Figure 12, is the maximum which will maintain stability. This state of stress is shown by the passive stress circle in Figure 10.

Figure 10 shows that three conditions must be met for a soil to be in an active or passive state of stress. These conditions are: 1) The stress circle must be tangent to the Mohr failure envelope, 2) the center of the stress circle must lie on the $\bar{\sigma}$ axis, and 3) the stress circle must pass through the point of known stress $(\bar{\sigma}_a, \tau_a)$.

A modification of the Mohr's circle of stresses will be used herein. This modification, the origin of planes, allows a better visualization of

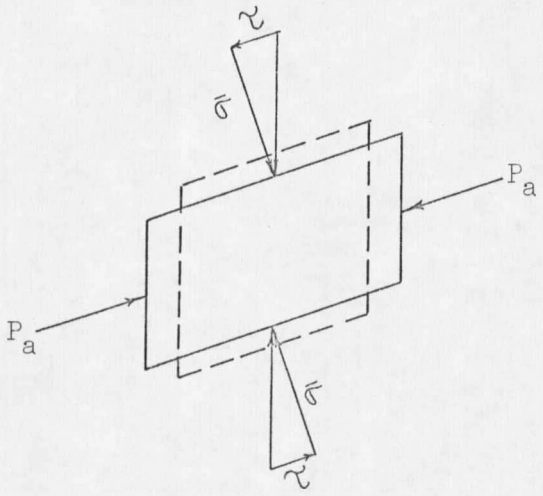

Figure 11. Active state of stress

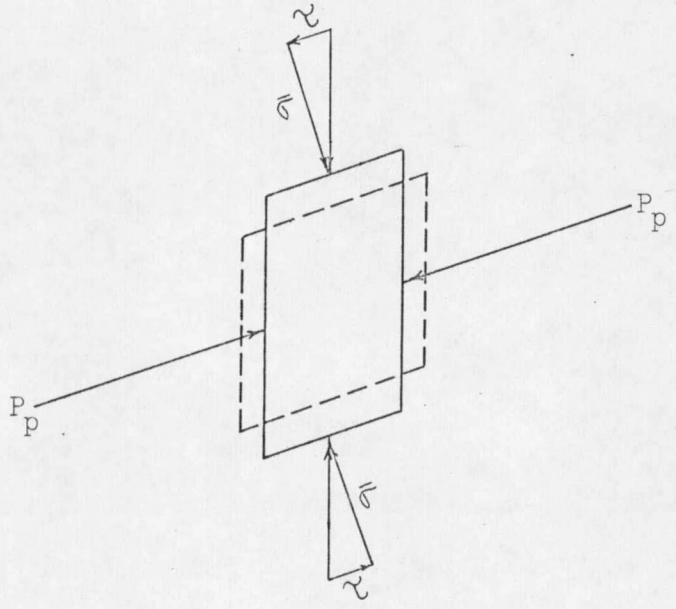

Figure 12. Passive state of stress

the stresses and the orientation of planes on which the stresses act than the conventional Mohr's circle method. The origin of planes, OP, is shown in Figure 10 and is obtained as follows:

1) Through the point of known stress condition, draw a line oriented identically to the plane on which the known stress acts.

2) The intersection of this line and the circle of stresses locates the origin of planes $(\bar{\sigma}_b, \tau_b)$.

3) The stress condition on any plane can be found by constructing a line oriented identically to the plane on which the stresses are to be found.

4) The point where this line again intersects the circle of stresses yields the desired stress condition $(\bar{\sigma}_c, \tau_c)$.

The stresses for the active case $(\bar{\sigma}_c, \tau_c)_{act}$ and the passive case $(\bar{\sigma}_c, \tau_c)_{pass}$ are shown for planes oriented 45° clockwise from the horizontal.

CHAPTER IV

ANALYTICAL DEVELOPMENT

The problem is to develop expressions for the normal and tangential stresses for the active and passive states of stress, with the angle of the investigation, α, being one of the variables. Other variables in these expressions are: the known stress condition $(\bar{\sigma}_a, \tau_a)$; the slope inclination, θ; and the strength characteristics of the soil, c and ϕ. There will be no need to develop separate equations for $(\bar{\sigma}_c, \tau_c)_{act}$ and $(\bar{\sigma}_c, \tau_c)_{pass}$ because the development results in a quadratic equation that yields solutions for both the active and passive states of stress.

The equation for a line parallel to the ground surface and passing through point $(\bar{\sigma}_a, \tau_a)$, as shown in Figure 13, is:

$$\tau = \bar{\sigma} \tan\theta + b \qquad (14)$$

where b is the intercept.

Substituting the known stress condition $(\bar{\sigma}_a, \tau_a)$, given by Equations (5) and (8), into Equation (14) yields:

$$\gamma_t Z_w \sin\theta\cos\theta + \gamma_{sat}(Z-Z_w)\sin\theta\cos\theta = \gamma_t Z_w \cos^2\theta\tan\theta + \gamma_b(Z-Z_w)\cos^2\theta\tan\theta + b \qquad (15)$$

Solving for b from Equation (15):

$$b = (\gamma_{sat}-\gamma_b)\left[(Z-Z_w)\sin\theta\cos\theta\right] \qquad (16)$$

Recalling that $\gamma_w = (\gamma_{sat}-\gamma_b)$, Equation (16) may be written as:

$$b = \gamma_w \sin\theta(Z-Z_w)\cos\theta \qquad (17)$$

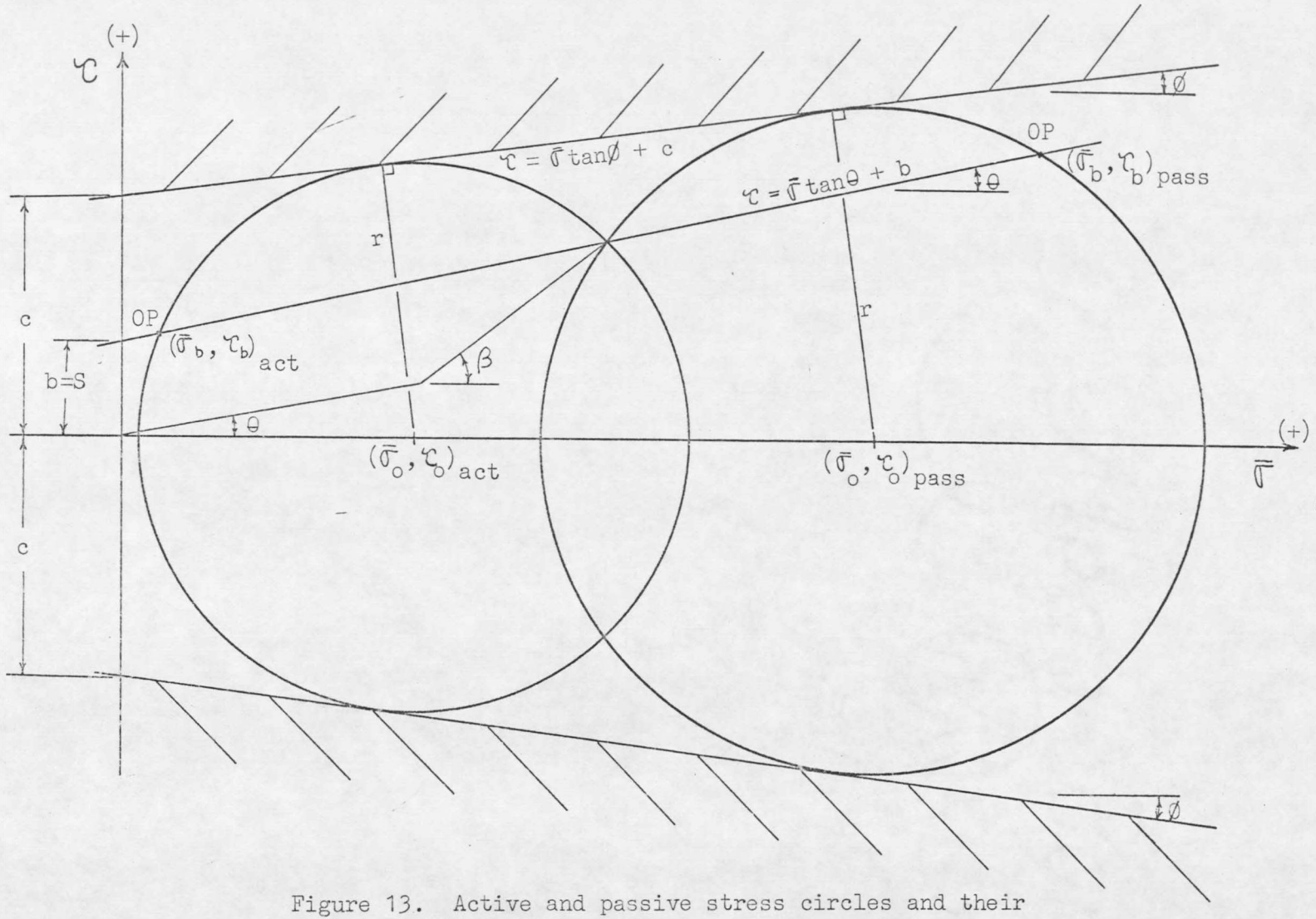

Figure 13. Active and passive stress circles and their relationship to Mohr's rupture envelope.

Equation (17) is recognized as the equation for the seepage force per unit area, S:

$$S = \gamma_w i V = \gamma_w \sin\theta (Z - Z_w) \cos\theta \qquad (18)$$

where: $i = \sin\theta$ (the hydraulic gradient as shown in Figure 5);

$V = (Z - Z_w)\cos\theta$ (the volume of the column of soil between the water table and plane A-A' shown in Figure 2).

The intercept, b, is therefore equal to the seepage force per unit area, S. Substituting the expression for b, from Equation (17), into Equation (14), yields the equation for a line through point $(\bar{\sigma}_a, \tau_a)$, with a slope equal to tanθ:

$$\tau = \bar{\sigma}\tan\theta + \gamma_w (Z - Z_w)\sin\theta\cos\theta = \bar{\sigma}\tan\theta + S \qquad (19)$$

From Equation (13) and Figure 13, the equation for a leaf of the Mohr rupture envelope can be written as:

$$\tau - \bar{\sigma}\tan\phi - c = 0 \qquad (20)$$

The normal form of Equation (20) is the expression for all lines perpendicular to the leaf of the failure envelope:

$$-\frac{\bar{\sigma}\tan\phi}{\sqrt{1+\tan^2\phi}} + \frac{\tau}{\sqrt{1+\tan^2\phi}} - \frac{c}{\sqrt{1+\tan^2\phi}} = 0 \qquad (21)$$

Because the stress circle is tangent to the failure envelope, the radius of the stress circle, r, is perpendicular to the failure envelope at the point of tangency. Noting that τ_o equals zero, the length of the radius is

found by substituting the coordinates for the center of the circle of stresses $(\bar{\sigma}_o, \tau_o)$ into Equation (21):

$$r = \left| -\frac{\bar{\sigma}_o \tan\phi}{\sqrt{1+\tan^2\phi}} - \frac{c}{\sqrt{1+\tan^2\phi}} \right| \qquad (22)$$

The general equation for the circle of stresses passing through point $(\bar{\sigma}_a, \tau_a)$ is, therefore:

$$(\bar{\sigma}-\bar{\sigma}_o)^2 + \tau^2 - \frac{(\bar{\sigma}_o \tan\phi + c)^2}{1+\tan^2\phi} = 0 \qquad (23)$$

The origin of planes, $(\bar{\sigma}_b, \tau_b)$, is defined by the intersection of the circle of stresses and the line parallel to the ground surface that passes through the point $(\bar{\sigma}_a, \tau_a)$. The general equation for this intersection is found by substituting the expression for τ from Equation (19) into Equation (23):

$$(\bar{\sigma}-\bar{\sigma}_o)^2 + (\bar{\sigma}\tan\theta + S)^2 - \frac{(\bar{\sigma}_o \tan\phi + c)^2}{1+\tan^2\phi} = 0 \qquad (24)$$

Equation (24) can be rewritten to yield a quadratic in $\bar{\sigma}$:

$$\bar{\sigma}^2(1+\tan^2\theta) + \bar{\sigma}(-2\bar{\sigma}_o + 2\tan\theta S)$$

$$+ \bar{\sigma}_o^2 + S^2 - \frac{(\bar{\sigma}_o \tan\phi + c)^2}{1+\tan^2\phi} = 0 \qquad (25)$$

Equation (25) will lead to two solutions for $\bar{\sigma}$: one solution $(\bar{\sigma}_a)$ will

correspond to the point of known stress $(\bar{\sigma}_a, \tau_a)$; and the other solution $(\bar{\sigma}_b)$ will correspond to the origin of planes $(\bar{\sigma}_b, \tau_b)$. Equation (25) can be solved by means of a "sum of roots" solution (Rosenback, et al, 1958), with the following result:

$$\bar{\sigma}_a + \bar{\sigma}_b = \frac{2\bar{\sigma}_o - 2\tan\theta S}{1+\tan^2\theta} \qquad (26)$$

By substituting $\bar{\sigma}_a$ for $\bar{\sigma}$, Equation (24) can be rewritten as a quadratic in $\bar{\sigma}_o$, in which $\bar{\sigma}_o$ is the only unknown:

$$\begin{aligned} &\bar{\sigma}_o^2 + \bar{\sigma}_o(-2\bar{\sigma}_a - 2\bar{\sigma}_a\tan^2\phi - 2\tan\phi c) \\ &\quad + \bar{\sigma}_a^2(1+\tan^2\phi+\tan^2\theta+\tan^2\phi\tan^2\theta) \\ &\quad + 2\bar{\sigma}_a\tan\theta S(1+\tan^2\phi) + S^2(1+\tan^2\phi) - c^2 = 0 \end{aligned} \qquad (27)$$

Solving Equation (27) by means of the "quadratic equation" and re-arranging, yields:

$$\begin{aligned} \bar{\sigma}_o = \bar{\sigma}_a(1+\tan^2\phi) + \tan\phi c \pm \Big\{ &\Big[-\bar{\sigma}_a(1+\tan^2\phi) - \tan\phi c\Big]^2 \\ &- \Big[\bar{\sigma}_a^2(1+\tan^2\phi+\tan^2\theta+\tan^2\phi\tan^2\theta) \\ &+ 2\bar{\sigma}_a\tan\theta S(1+\tan^2\phi) + S^2(1+\tan^2\phi) - c^2\Big]\Big\}^{\frac{1}{2}} \end{aligned} \qquad (28)$$

The positive root defines the center of the passive stress circle and the negative root defines the center of the active stress circle.

Solving for $\bar{\sigma}_b$ in Equation (26), yields:

$$\bar{\sigma}_b = \frac{2\bar{\sigma}_o - 2\tan\theta S}{(1+\tan^2\theta)} - \bar{\sigma}_a \qquad (29)$$

where: $\bar{\sigma}_o$ is defined by Equation (28);

S is defined by Equation (18); and

$\bar{\sigma}_a$ is defined by Equation (8).

Because $\bar{\sigma}_o$ has two roots, it follows that $\bar{\sigma}_b$ will also have two roots, one for the active origin of planes and the other for the passive origin of planes, as shown in Figure 13. An equation for τ_b can be developed, in terms of the defined quantity, $\bar{\sigma}_b$, by substituting $\bar{\sigma}_b$ into Equation (19):

$$\tau_b = \bar{\sigma}_b\tan\theta + \gamma_w(Z-Z_w)\sin\theta\cos\theta = \bar{\sigma}_b\tan\theta + S \qquad (30)$$

With the expressions, Equations (29) and (30), defining the origin of planes, the state of stress, $(\bar{\sigma}_c, \tau_c)$, on any plane of investigation, α, can now be obtained. The conventions and notation for the typical stress circle are shown in Figure 14.

The general equation for the slope of the line, GH, that passes through point $(\bar{\sigma}_b, \tau_b)$, as shown in Figure 14, is:

$$\tan\alpha = \frac{\tau - \tau_b}{\bar{\sigma} - \bar{\sigma}_b} \qquad (31)$$

Therefore, the equation of the line that passes through point $(\bar{\sigma}_b, \tau_b)$, and has a slope of α, is:

$$\tau = \tau_b + (\bar{\sigma} - \bar{\sigma}_b)\tan\alpha \qquad (32)$$

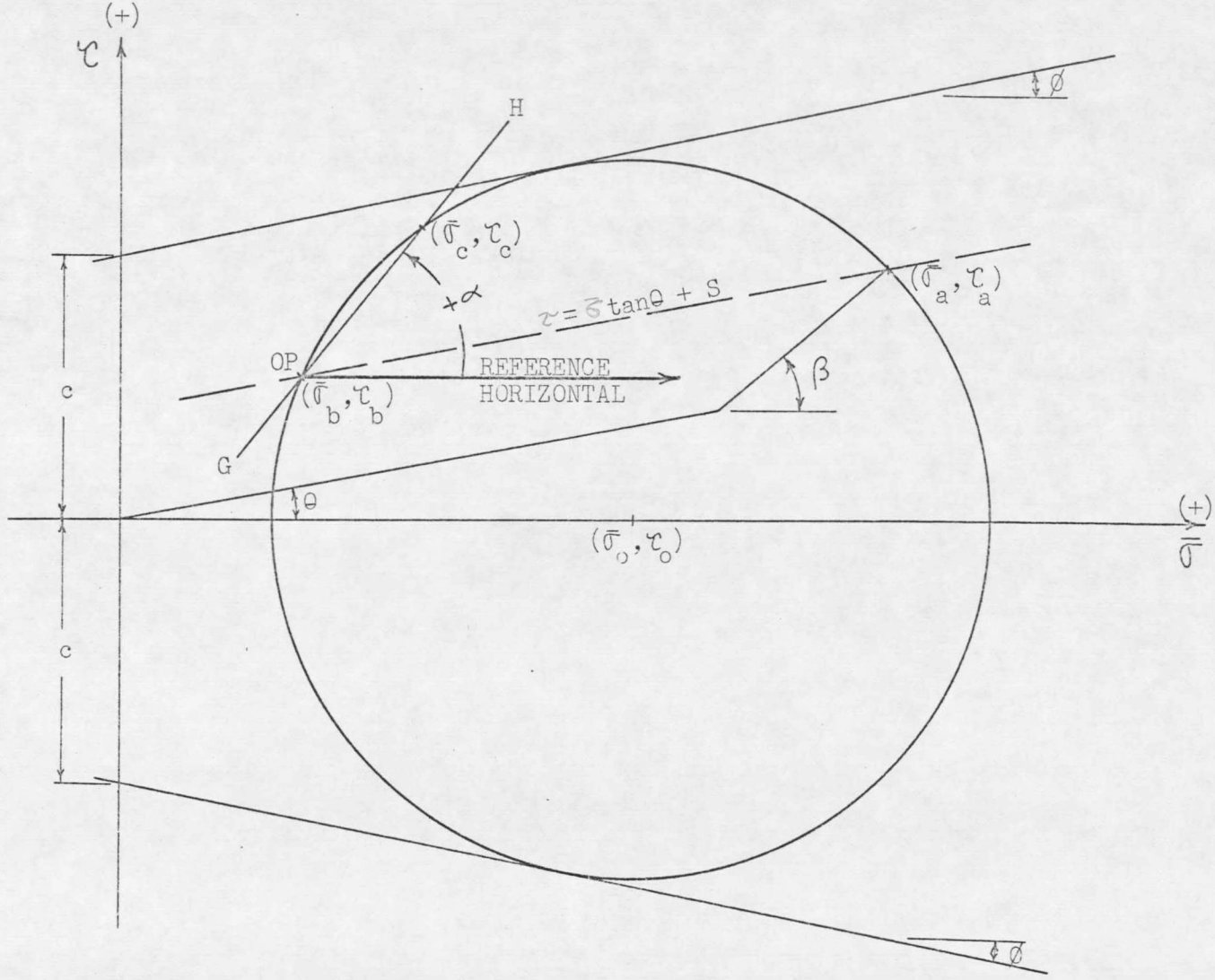

Figure 14. Typical stress circle.

the state of stress on a plane that is oriented at an angle α can be obtained by developing an equation for the intersection of the stress circle and line GH. The equation for the intersection is found by substituting the expression for τ from Equation (32) into Equation (23):

$$(\bar{\sigma}-\bar{\sigma}_o)^2 + \left[\tau_b+(\bar{\sigma}-\bar{\sigma}_b)\tan\alpha\right]^2 - \frac{(\bar{\sigma}_o\tan\phi+c)^2}{1+\tan^2\phi} \qquad (33)$$

Equation (33) can be rewritten to yield a quadratic in $\bar{\sigma}$:

$$\bar{\sigma}^2(1+\tan^2\alpha) + \bar{\sigma}(-2\bar{\sigma}_o+2\tau_b\tan\alpha-2\bar{\sigma}_b\tan^2\alpha)$$

$$+ (\bar{\sigma}_o^2+\tau_b^2-2\tau_b\bar{\sigma}_b\tan\alpha+\bar{\sigma}_b^2\tan^2\alpha) \qquad (34)$$

$$- \frac{(\bar{\sigma}_o\tan\phi+c)^2}{1+\tan^2\phi} = 0$$

The two roots of Equation (34) are determined by the "sum of roots" technique. One root is the normal stress at the origin of planes, $\bar{\sigma}_b$, while the other root is the normal stress on the plane of investigation, $\bar{\sigma}_c$:

$$\bar{\sigma}_c = \frac{2\bar{\sigma}_o-2\tau_b\tan\alpha+2\bar{\sigma}_b\tan^2\alpha}{1+\tan^2\alpha} - \bar{\sigma}_b \qquad (35)$$

Because all terms on the right-hand side of Equation (35) have been previously defined, the only unknown, $\bar{\sigma}_c$, is expressed in terms of defined parameters. An alternate form of Equation (35) can be written by substituting the expression for τ_b from Equation (30) into Equation (35):

$$\bar{\sigma}_c = \frac{2\bar{\sigma}_o + \bar{\sigma}_b(-1+\tan^2\alpha - 2\tan\alpha\tan\theta) - 2\tan\alpha S}{1+\tan^2\alpha} \qquad (36)$$

An equation for τ_c can be developed by substituting $\bar{\sigma}_c$, into Equation (32):

$$\tau_c = \tau_b + (\bar{\sigma}_c - \bar{\sigma}_b)\tan\alpha \qquad (37)$$

Equations (36) and (37) are general equations for the normal and tangential stresses on a plane at any inclination, when the soil within an infinite slope is at the active or passive state of stress.

CHAPTER V

DISCUSSION

EQUATION COMPATABILITY

As a means of verifying this analytical development, the equations presented will be compared to those developed by other investigators. Martin (1961) has shown that his solution for active and passive pressures on a vertical plane agrees with developments by various other investigators. Because this paper is an extension of Martin's work, demonstrating that the equations presented herein agree with Martin's equations would also imply agreement with developments by other investigators.

The proof of compatibility is accomplished by showing that Equation (35), for the normal stress $\bar{\sigma}_c$, reduces to Martin's equation for normal stress; therefore the restrictions (no seepage forces and stresses on a vertical plane) on Martin's development must be applied to Equation (35).

Recalling the trigonometric identity, $(1+\tan^2\alpha)=(\frac{1}{\cos^2\alpha})$, Equation (35) can be rewritten:

$$\bar{\sigma}_c = 2\bar{\sigma}_o\cos^2\alpha - 2\tau_b\sin\alpha\cos\alpha + 2\bar{\sigma}_b\sin^2\alpha - \bar{\sigma}_b \qquad (38)$$

The normal stress on a vertical plane is found by setting α equal to 90° in Equation (38):

$$\bar{\sigma}_c = \bar{\sigma}_b \qquad (39)$$

Therefore the normal stress on a vertical plane is equal to the normal stress at the origin of planes, $\bar{\sigma}_b$ in Equation (29). $\bar{\sigma}_b$ can be adapted to the no seepage force condition by setting S equal to zero in Equation (29):

$$\bar{\sigma}_b = \frac{2\bar{\sigma}_o}{1+\tan^2\theta} - \bar{\sigma}_a \qquad (40)$$

Substituting the expression for $\bar{\sigma}_o$ from Equation (28) into Equation (40), and recalling that $\bar{\sigma}_c$ equals $\bar{\sigma}_b$ for this special case:

$$\bar{\sigma}_c = \frac{2\bar{\sigma}_a + 2\bar{\sigma}_a\tan^2\phi + 2c\tan\phi}{1+\tan^2\theta} \pm \left\{\frac{(-2\bar{\sigma}_a - 2\bar{\sigma}_a\tan^2\phi - 2c\tan\phi)^2}{(1+\tan^2\theta)^2} - \frac{4\left[\bar{\sigma}_a^2(1+\tan^2\phi+\tan^2\theta+\tan^2\phi\tan^2\theta) - c^2\right]}{(1+\tan^2\theta)^2}\right\}^{\frac{1}{2}} - \bar{\sigma}_a \qquad (41)$$

Equation (41) is exactly the same (except for notation) as Martin's equation for the normal stress on a vertical plane. Therefore the general equations given in this analytical development agree with equations given by other investigators for their more restrictive conditions.

CRITICAL DEPTH

The soil properties, slope of ground surface, depth of the water table, and depth to the plane of investigation will all affect the stress condition $(\bar{\sigma}_a, \tau_a)$. Active and passive stress circles can be drawn through point $(\bar{\sigma}_a, \tau_a)$ if, and only if, this stress condition remains within the Mohr envelope. The Mohr diagram, with the stress conditions $(\bar{\sigma}_a, \tau_a)$ superimposed, is used to show conditions where failure is impending. The critical depth can be defined as the depth at which the stress condition on

plane A-A' is equal to the strength of the soil. When the stress condition, $(\bar{\sigma}_a, \tau_a)$ lies on the Mohr envelope, only one stress circle may be drawn. For this condition, the active and passive stress circles coincide, and failure is impending.

The stress on plane A-A', $(\bar{\sigma}_a, \tau_a)$, at the critical depth, in a cohesive material, is shown in Figure 15. If:

1) $\phi \geq \beta \geq \theta$, no critical depth exists;

2) $\beta > \phi \geq \theta$, a critical depth exists; and

3) $\beta \geq \theta > \phi$, a critical depth exists.

The stress on plane A-A', $(\bar{\sigma}_a, \tau_a)$, at the critical depth, in a cohesionless material, is shown in Figure 16. If:

1) $\phi > \beta \geq \theta$, no critical depth exists;

2) $\phi = \beta > \theta$, no critical depth exists;

3) $\phi = \beta = \theta$, a failure condition exists at all depths;

4) $\beta > \phi > \theta$, a critical depth exists; and

5) $\beta \geq \theta > \phi$, a failure condition exists at all depths.

The equations for critical depth are found by equating stress conditions to strength conditions. Equating the right-hand sides of Equations (19) and (13), yields:

$$\bar{\sigma} \tan\theta + S = \bar{\sigma} \tan\phi + c \qquad (42)$$

Substituting the expressions for $\bar{\sigma}_a$ and S from Equations (8) and (18) into Equation (42) and solving for the critical depth, Z_{cr}, yields:

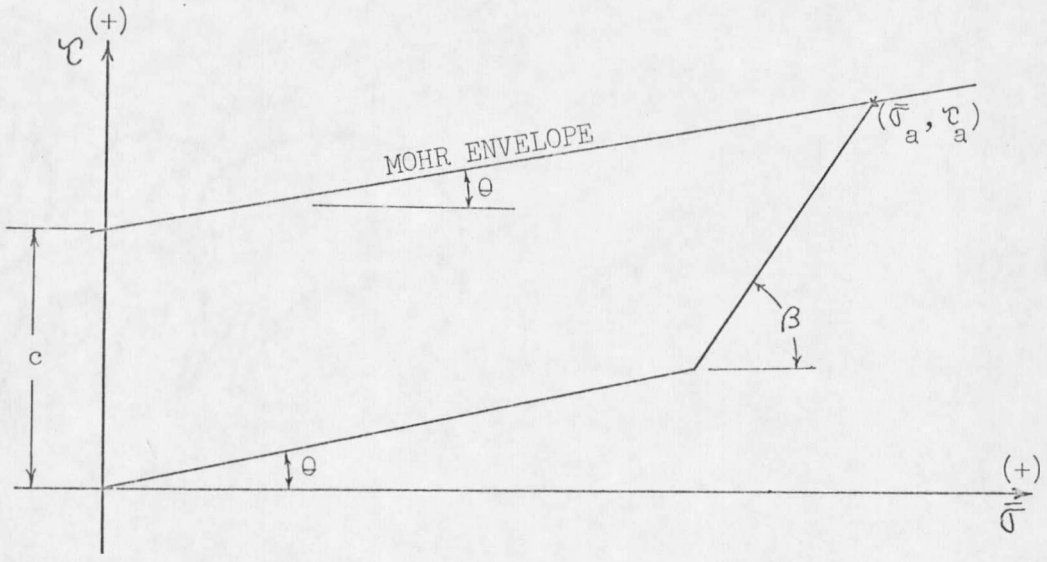

Figure 15. Stress condition at the critical depth when the unit cohesion is greater than zero.

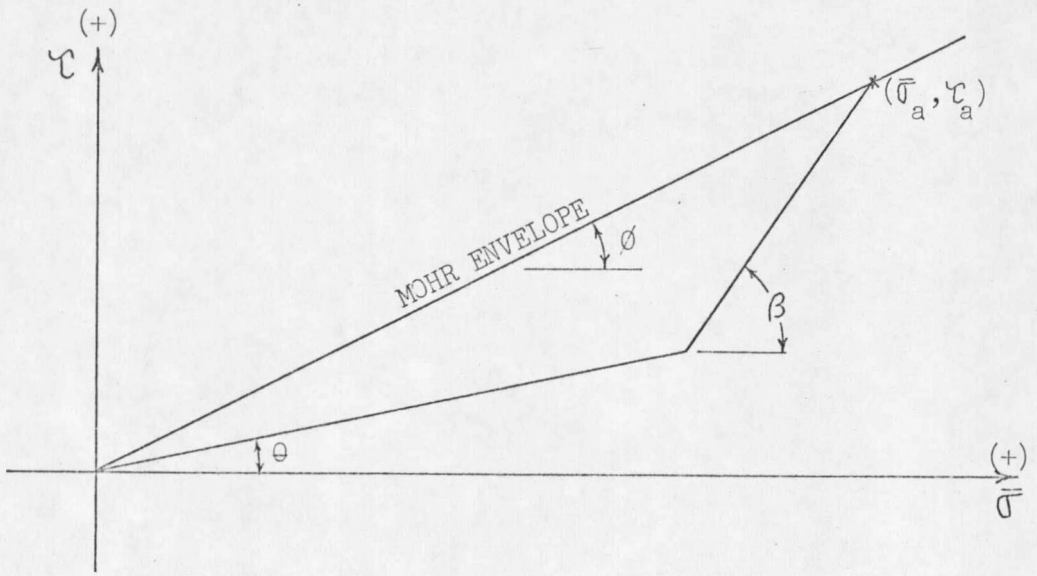

Figure 16. Stress condition at the critical depth when the unit cohesion equals zero.

$$Z_{cr} = Z_w + \frac{c - \gamma_t Z_w \cos^2\theta(\tan\theta - \tan\phi)}{\gamma_b \cos^2\theta(\tan\theta - \tan\phi) + \gamma_w \sin\theta\cos\theta} \qquad (43)$$

For the special case of no ground water $(Z-Z_w)$ is zero. Solving Equations (8) and (18) for Z_{cr}:

$$Z_{cr} = \frac{c}{\gamma_t' \cos^2\theta(\tan\theta - \tan\phi)} \qquad (44)$$

which is the critical depth for the special case of no ground water. Note that in all the equations presented, a slope will be stable as long as the depth of the soil material is less than the critical depth.

Figure 17 shows the stress condition at the critical depth for a typical slope. This figure is also helpful for visualizing the expressions presented in previous chapters for the stresses acting on plane A-A'.

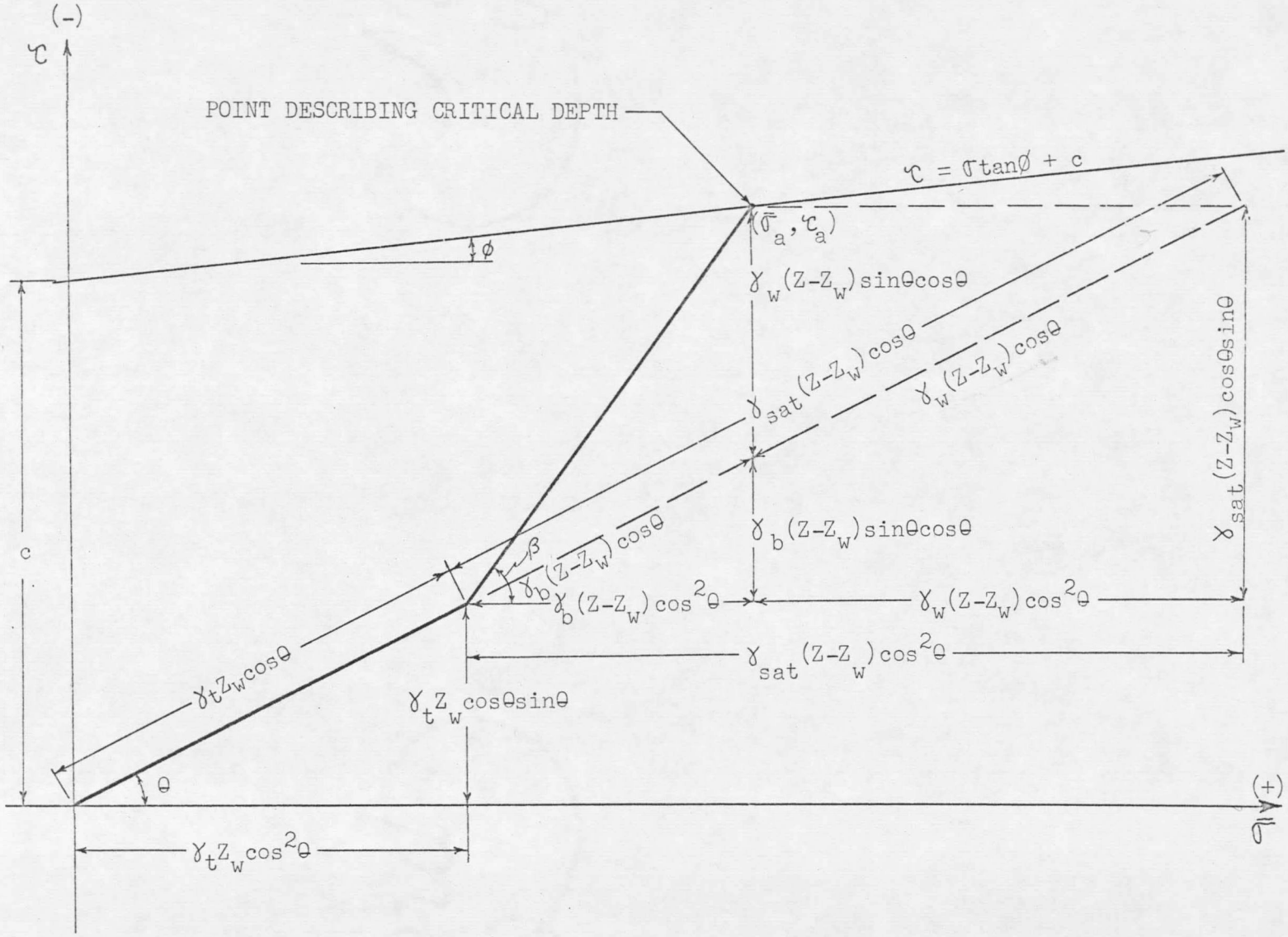

Figure 17. Stress relationships at critical depth.

CHAPTER VI

NONDIMENSIONAL FORMULATION

In order to reduce the number of variables, the equations presented in the analytical development were nondimensionalized. Equation (36) for $\bar{\sigma}_c$ was expanded and divided by c, the unit cohesion, to determine the basic dimensionless parameters:

$$1) \quad Y = \frac{\gamma_t Z}{c}$$

$$2) \quad Y' = \frac{\gamma_b (Z - Z_w)}{c}$$

$$3) \quad X = \frac{\gamma_w (Z - Z_w)}{c} = Y' \left(\frac{\gamma_w}{\gamma_b} \right)$$

The development of the nondimensional expressions parallels the analytical development. It was necessary to define additional parameters for the equations which lead to the final nondimensional expressions for the normal and tangential stresses. Because each nondimensionalized equation has an analog in the analytical development, the equations are presented with few details.

The nondimensional form of the effective normal stress on plane A-A', $\bar{\sigma}_a$, is obtained from Equation (8):

$$N''_a = \frac{\bar{\sigma}_a}{c} = Y \cos^2 \theta + Y' \cos^2 \theta \qquad (45)$$

The nondimensional form of the seepage force per unit area, S, is obtained

from Equation (18):

$$v = \frac{S}{c} = X\sin\theta\cos\theta = \left(Y'\frac{\gamma_w}{\gamma_b}\right)\sin\theta\cos\theta \qquad (46)$$

The nondimensional form of the tangential stress on plane A-A', τ_a, is obtained from Equation (5):

$$T''_a = \frac{\tau_a}{c} = N''_a\tan\theta + X\sin\theta\cos\theta \qquad (47)$$

The nondimensional form of the center of the stress circle, $\bar{\sigma}_o$, is obtained from Equation (28):

$$N''_o = \frac{\bar{\sigma}_o}{c} = N''_a(1+\tan^2\phi) + \tan\phi$$

$$\pm\left\{\left[N''^2_a(1+\tan^2\phi)^2 + 2N''_a(1+\tan^2\phi)\tan\phi + \tan^2\phi\right]\right.$$

$$-N''^2_a(1+\tan^2\phi+\tan^2\theta+\tan^2\phi\tan^2\theta) - 2N''_a v\tan\theta(1+\tan^2\phi) \qquad (48)$$

$$\left.-v^2(1+\tan^2\phi) + 1\right\}^{\frac{1}{2}}$$

The nondimensional form of the normal stress at the origin of planes, $\bar{\sigma}_b$, is obtained from Equation (29):

$$N''_b = \frac{\bar{\sigma}_b}{c} = .2\cos^2\theta\left(N''_o - v\tan\theta\right) - N''_a \qquad (49)$$

The nondimensional form of the tangential stress at the origin of planes, τ_b, is obtained from Equation (30):

$$T''_b = \frac{\tau_b}{c} = N''_b \tan\theta + v \qquad (50)$$

The nondimensional form of the normal stress on a plane at the depth of investigation oriented at angle α, $\bar{\sigma}_c$, is obtained from Equation (36):

$$N''_c = \frac{\bar{\sigma}_c}{c} = \cos^2\alpha \left[2N''_o + N''_b (-1 + \tan^2\alpha - 2\tan\alpha\tan\theta) - 2v\tan\alpha \right] \qquad (51)$$

The nondimensional form of the tangential stress on a plane at the depth of investigation oriented at angle α, τ_c, is obtained from Equation (37):

$$T''_c = \frac{\tau_c}{c} = T''_b + (N''_c - N''_b)\tan\alpha \qquad (52)$$

Figure 18 shows the notation on a nondimensional Mohr's diagram, which is analogous to Figure 13.

The equations for the nondimensional analogy of the critical depth were developed in the same manner as Equations (42) through (44). The critical depth in terms of the nondimensional parameters is:

$$(Y + Y')_{cr} = \frac{1 - X\sin\theta\cos\theta}{\cos^2\theta(\tan\theta - \tan\phi)} \qquad (53)$$

where: $(Y + Y')_{cr}$ is the nondimensional form of the critical depth

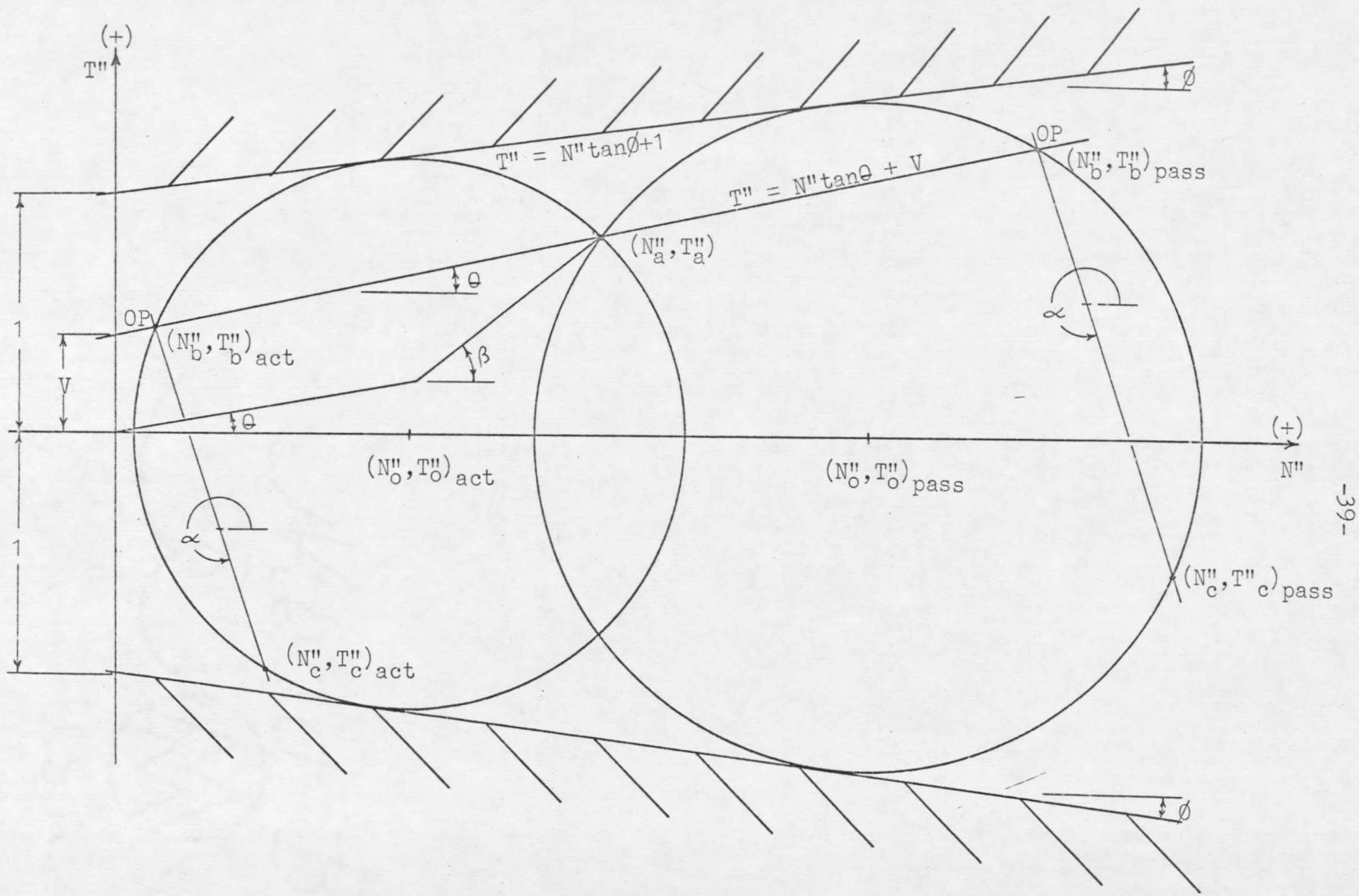

Figure 18. Nondimensional Mohr diagram.

For the special case of no groundwater table, the nondimensional critical depth is:

$$Y_{cr} = \frac{1}{\cos^2\theta(\tan\theta-\tan\phi)} \qquad (54)$$

CHAPTER VII

RESULTS

DIMENSIONAL FORM

The equations presented in the analytical development were programmed for solution on an IBM 1620, Model II, digital computer. The slope inclination θ, the depth to the water table Z_w, the depth of investigation Z, and the soil properties ϕ, c, γ_t, and γ_b were assigned appropriate values and the active and passive stresses acting on a plane at inclination α were determined. The angle α was incremented from 0° to 360° in order to solve for the stress on selected planes. A listing of this computer program is shown in Appendix A and typical results are shown in Tables II and III.

TABLE II

ACTIVE STRESSES

unit cohesion, $c = 1000.0$ psf

depth to water table, $Z_w = 20.0$ ft.

angle of internal friction, $\phi = 30^\circ$

ground surface inclination, $\theta = 20^\circ$

soil unit weight above the water table, $\gamma_t = 100.0$ pcf

bouyant unit weight, $\gamma_b = 65.0$ pcf

Z DEPTH TO PLANE OF INVESTIGATION	α ANGLE OF PLANE OF INVESTIGATION*	$\bar{\sigma}_c$ NORMAL EFFECTIVE STRESS ON PLANE OF INVESTIGATION	τ_c TANGENTIAL EFFECTIVE STRESS ON PLANE OF INVESTIGATION
10	15.0	926.1	172.0
	30.0	722.9	586.4
	45.0	339.7	843.7
	60.0	-120.7	874.9
	75.0	-535.1	671.6
	90.0	-792.4	288.4
	105.0	-823.6	-172.0
	300.0	-620.3	-586.4
	315.0	-237.1	-843.7
	330.0	223.3	-874.9
	345.0	637.7	-671.6
	360.0	895.0	-288.4
20	15.0	1861.7	451.6
	30.0	1483.1	961.3
	45.0	900.4	1213.5
	60.0	269.6	1140.5
	75.0	-240.0	761.9
	90.0	-492.2	179.1
	285.0	-419.2	-451.5
	300.0	-40.6	-961.3
	315.0	542.1	-1213.5
	330.0	1172.8	-1140.5
	345.0	1682.6	-761.9
	360.0	1934.7	-179.1

*α is measured counterclockwise from the horizontal.

TABLE III

PASSIVE STRESSES

unit cohesion, $c = 1000.0$ psf

depth to water table, $Z_w = 20.0$ ft.

angle of internal friction, $\phi = 30^\circ$

ground surface inclination, $\theta = 20^\circ$

soil unit weight above the water table, $\gamma_t = 100.0$

bouyant unit weight, $\gamma_b = 65.0$ pcf

Z DEPTH TO PLANE OF INVESTIGATION	α ANGLE OF PLANE OF INVESTIGATION*	$\bar{\sigma}_c$ NORMAL EFFECTIVE STRESS ON PLANE OF INVESTIGATION	τ_c TANGENTIAL EFFECTIVE STRESS ON PLANE OF INVESTIGATION
10	150.0	4221.8	2480.1
	165.0	2879.4	2529.7
	180.0	1692.0	1901.4
	195.0	977.9	763.6
	210.0	928.3	-578.7
	225.0	1556.6	-1766.0
	240.0	2694.4	-2480.1
	255.0	4036.8	-2529.7
	270.0	5224.2	-1901.4
	285.0	5938.3	-763.6
	300.0	5987.8	578.7
	315.0	5359.6	1766.0
20	150.0	6362.2	3213.8
	165.0	4591.9	3393.0
	180.0	2969.2	2662.9
	195.0	1928.9	1219.4
	210.0	1749.8	-550.9
	225.0	2479.8	-2173.6
	240.0	3923.4	-3213.8
	255.0	5693.7	-3393.0
	270.0	7316.4	-2662.9
	285.0	8356.7	-1219.4
	300.0	8535.8	550.8
	315.0	7805.8	2173.5

*α is measured counterclockwise from the horizontal.

NONDIMENSIONAL FORM

The equations presented in the nondimensional formulation were programmed for an IBM 1620, Model II, digital computer. The parameters ϕ, θ, Y, and Y', were assigned various levels, and the nondimensional values representing the active and passive stresses, acting on a plane at inclination α, were determined. The angle α was incremented from 0° to 360° in order to solve for the stress on selected planes. The parameters ϕ, θ, Y, and Y', were then systematically varied to provide a comprehensive tabulation of results. Typical results are presented in Tables IV and V.

As an example, the resulting nondimensional tables may be used as follows:

Let: $\phi = 0^{\circ}$

$\theta = 20^{\circ}$

$Z_w = 4.0$ ft.

$Z = 6.3$ ft.

$c = 320$ psf

$\gamma_b = 41.60$ pcf

$\gamma_t = 80$ pcf

$\alpha = 75^{\circ}$

It is desired that the active stress for the above conditions be determined. The nondimensional parameters Y and Y' are calculated as follows:

$$Y = \frac{\gamma_t Z_w}{c} = \frac{(80)(4.0)}{320} = 1.0$$

TABLE IV

NONDIMENSIONAL ACTIVE STRESSES

angle of internal friction, $\phi = 0^{\circ}$

ground surface inclination, $\theta = 20^{\circ}$

Y[1]	Y'[2]	α[3]	N''_c[4]	T''_c[5]
1.00	0.30	15.0	1.2330	.4103
		30.0	.9056	.8113
		45.0	.4217	.9949
		60.0	-.0896	.9119
		75.0	-.4902	.5846
		90.0	-.6738	.1006
		285.0	-.5908	-.4103
		300.0	-.2635	-.8113
		315.0	.2204	-.9949
		330.0	.7313	-.9119
		345.0	1.1323	-.5846
		360.0	1.3160	-.1006
1.00	0.60	15.0	1.5433	.6878
		30.0	1.1021	.9586
		45.0	.5846	.9725
		60.0	.1296	.7258
		75.0	-.1411	.2846
		270.0	-.1550	-.2328
		285.0	.0916	-.6878
		300.0	.5328	-.9586
		315.0	1.0503	-.9725
		330.0	1.5054	-.7258
		345.0	1.7761	-.2846
		360.0	1.7900	.2328

[1] Y is a nondimensional parameter ($Y = \gamma_t Z_w/c$).

[2] Y' is a nondimensional parameter ($Y' = \gamma_b(Z-Z_w)/c$).

[3] α is the angle of the plane of investigation as measured counterclockwise from the horizontal.

[4] N''_c is the nondimensional form of the effective stress on the plane of investigation.

[5] T''_c is the nondimensional form of the tangential effective stress on the plane of investigation.

TABLE V

NONDIMENSIONAL PASSIVE STRESSES

angle of internal friction, $\phi = 0^{\circ}$

ground surface inclination, $\theta = 20^{\circ}$

Y(1)	Y'(2)	α(3)	N''_c(4)	T''_c(5)
1.00	0.30	165.0	2.2204	.9693
		180.0	1.7029	.9623
		195.0	1.2581	.6974
		210.0	1.0054	.2457
		225.0	1.0124	-.2718
		240.0	1.2772	-.7166
		255.0	1.7290	-.9693
		270.0	2.2466	-.9623
		285.0	2.6913	-.6974
		300.0	2.9441	-.2457
		315.0	2.9371	.2718
		330.0	2.6722	.7166
1.00	0.60	195.0	1.5614	.8946
		210.0	1.1739	.5514
		225.0	1.0099	.0604
		240.0	1.1135	-.4467
		255.0	1.4567	-.8342
		270.0	1.9477	-.9981
		285.0	2.4549	-.8946
		300.0	2.8423	-.5514
		315.0	3.0063	-.0604
		330.0	2.9028	.4467
		345.0	2.5595	.8342
		360.0	2.0685	.9981

[1] Y is a nondimensional parameter ($Y = \gamma_t Z_w/c$).

[2] Y' is a nondimensional parameter ($Y' = \gamma_b(Z-Z_w)/c$).

[3] α is the angle of the plane of investigation as measured counterclockwise from the horizontal.

[4] N''_c is the nondimensional form of the effective stress on the plane of investigation.

[5] T''_c is the nondimensional form of the tangential effective stress on the plane of investigation.

$$Y' = \frac{\gamma_b(Z-Z_w)}{c} = \frac{(41.60)(6.3-4.0)}{320} \approx 0.3$$

The upper portion of Table IV is applicable for the example values of ϕ, θ, Y, and Y'; therefore, values are obtained for parameters N''_c and T''_c from the line corresponding to the α value of 75°:

$$N''_c = -0.4902$$

$$T''_c = 0.5846$$

Since $N''_c = \frac{\bar{\sigma}_c}{c}$, then $\bar{\sigma}_c = cN''_c = (320)(-0.4902) = -157.0$ pounds per square foot, which is the active effective normal stress on a plane inclined at an angle α of 75°. Since $T''_c = \frac{\tau_c}{c}$, then $\tau_c = cT''_c = (320)(0.5846) = 186.8$ pounds per square foot, which is the tangential stress on a plane inclined at an angle α of 75°.

CHAPTER VIII

CONCLUSIONS AND RECOMMENDATIONS FOR FURTHER STUDY

CONCLUSIONS

When the Rankine assumptions are to be used in the determination of earth pressures, the equations presented herein can be applied to yield the active and passive earth pressures, on a plane at any inclination, within an infinite slope having a water table which is parallel to the ground surface.

The solutions presented herein do not include pressures due to freezing or swelling of soil, hydrostatic water conditions, et cetera. The solutions are documented for use when the Rankine assumptions are valid, however, the author does not advocate the use of Rankine's theory in those cases where conjugate stresses do not exist.

RECOMMENDATIONS FOR FURTHER STUDY

A useful extension of this study would be to develop nomographic solutions for the equations developed herein.

Another useful extension would be to integrate the expressions presented herein for earth pressures in order to solve for earth thrusts.

Other possibilities are: 1) Letting the Mohr envelope be of curvilinear form in order to simulate nonlinear soil strength with respect to depth; and 2) defining the shape of the complete failure surface.

APPENDIX

APPENDIX A

DIMENSIONAL COMPUTER PROGRAM

**********DIMENSIONAL COMPUTER PROGRAM**********

```
C         STRESS ON ANY PLANE -INFINITE SLOPE THEORY     W. HARTSOG
C*****************************************************************
      READ 1, COHES, PHID, GAMMA, THETAD
C  COHES=COHESION P.S.F. ,     PHID=FRICTION ANGLE IN DEGREES
C  GAMMA=UNIT WEIGHT OF SOIL ABOVE W.T. IN P.C.F.
C  THETAD=INCLINATION OF PLANE IN DEGREES
    1 FORMAT (4F10.1)
      PRINT 2, COHES, PHID, GAMMA, THETAD
   20FORMAT (10X,10HCOHESION =,F6.1,4H PSF,7X,6HPHID =,F6.1,5H DEG.,
    17X,7HGAMMA =,F6.1,4H PCF,7X,8HTHETAD =,F6.1,5H DEG.)
      READ 3 ,GAMMAB, ZW
C  GAMMAB=BUOYANT UNIT WEIGHT,     ZW=VERTICAL DEPTH TO W.T.
    3 FORMAT (2F10.1)
      READ 33,N
C  N IS INCREMENT OF ALPHA IN DEGREES
   33 FORMAT (I10)
      READ 34, L,M
C  L IS INCREMENT OF DEPTH      M IS MAXIMUM  DEPTH
   34 FORMAT (2I10)
      PRINT 4,N,GAMMAB,ZW
    4 FORMAT (39X,3HN =,I3,15X,8HGAMMAB =,F6.1,4H PCF,11X,4HZW =,F6.1,
    14H FT.)
      PRINT 9
    9 FORMAT (1H0,19X,46H**********************************************)
      PI=3.14159
      PHI=(PHID*PI)/180.
      THETA= THETAD*PI/180.
      GAMMAW=62.4
      A=COSF(THETA)
      A2=A*A
      B=SINF(THETA)
      TANT=B/A
      TANT2=TANT*TANT
      H=SINF(PHI)/COSF(PHI)
      D=1.+H*H
      GA2=GAMMA*A2
      GA2D=GA2*D
      COHESH=COHES*H
   72 DO 51 IZ=L,M,L
      Z=IZ
C  Z=TOTAL DEPTH TO PLANE UNDER STUDY
      IF(Z-ZW)20, 20, 30
   20 Z1=Z
      Z2=0.
```

```
      GO TO 5
   30 Z1=ZW
C  Z1=DEPTH OF SOILS ABOVE W.T.
      Z2=Z-ZW
C  Z2=DEPTH OF SOILS BELOW W.T.
    5 SIG1=(Z1*GAMMA+Z2*GAMMAB)*A2
C  SIG1=NORMAL INTERGRANULAR STRESS ON PLANE INCLINED AT THETA
      S=B*GAMMAW*Z2*A
      T1=SIG1*TANT+S
C  T1=SHEARING STRESS ON PLANE INCLINED AT THETA
      G0=SIG1*D+COHESH
      B00=     ((-SIG1*D-COHESH)**2)-((SIG1*SIG1)*(D+TANT2+H*H*TANT2)
     1+2.*SIG1*TANT*S*D+S*S*D-COHES*COHES)
      IF (B00) 1001,1002,1002
 1001 PRINT 1003,Z
 1003 FORMAT (1H1,3H Z=,F5.1,68H*** FAILURE CONDITIONS EXIST AT THIS DEP
     1TH WITH ABOVE PROPERTIES ***)
 1004 GO TO 1005
 1002 B0=SQRTF(B00)
      SIG0A=G0-B0
C  SIG0A=CENTER OF ACTIVE STRESS CIRCLE
      SIG0P=G0+B0
C  SIG0P=CENTER OF PASSIVE STRESS CIRCLE
      SIG2A=((2.*SIG0A-2.*TANT*S)/(1.+TANT2))-SIG1
C  SIG2A=NORMAL INTERGRANULAR STRESS AT ORIGIN OF PLANES FOR ACTIVE CASE
      SIG2P=((2.*SIG0P-2.*TANT*S)/(1.+TANT2))-SIG1
C SIG2P=NORMAL INTERGRANULAR STRESS AT ORIGIN OF PLANES FOR PASSIVE CASE
      T2A=SIG2A*TANT+S
C  T2A=SHEAR AT O.P. (ACTIVE CASE)
      T2P=SIG2P*TANT+S
C  T2P=SHEAR AT O.P. (PASSIVE CASE)
C  FOR ABOVE EQUATIONS REFER TO NOTES
      DELA=ATANF((-SIG2A+SIG0A)/T2A)
      IF(DELA) 50,59,60
   59 IF (T2A) 50,60,60
   50 DDELA=180.+((180./PI)*DELA)
C  DDELA=ANGLE TANGENT MAKES WITH HORIZONTAL (ACTIVE) -NOTES 13-17
      GO TO 201
   60 DDELA=(180./PI)*DELA
  201 DELP=ATANF((-SIG2P+SIG0P)/T2P)
      IF(DELP) 100,209,200
  209 IF (T2P) 500,400,400
  200 IF(T2P) 300,400,400
  400 DDELP=(180./PI)*DELP
C  DDELP=ANGLE TANGENT MAKES WITH HORIZONTAL (PASSIVE) -NOTES 13-17
      GO TO 80
  300 DDELP=180.+((180./PI)*DELP)
      GO TO 80
  100 IF (T2P) 500,600,600
```

```
  500 DDELP=180.+((180./PI)*DELP)
      GO TO 80
  600 DDELP=360.+((180./PI)*DELP)
   80 PRINT 6, Z,DDELA
    6 FORMAT(1H1,3H Z=,F5.1,11X,13HDELTA ACTIVE=,F6.1)
      PRINT 7
    7 FORMAT(1H0///,19X,4HSIG1,13X,2HT1,13X,5HSIG0A,11X,5HSIG2A,12X,
     13HT2A)
      PRINT 21, SIG1,T1,SIG0A,SIG2A,T2A
   21 FORMAT (9X,5F16.1)
      PRINT 23
   23 FORMAT(1H0,25X,5HALPHA,21X,5HSIG3A,12X,3HT3A,13X,3HP3A)
      DO 24 IALPHA= N,360,N
      ALPHAD=IALPHA
C  ALPHAD=ANGLE OF PLANE FOR WHICH STRESS CONDITIONS ARE TO BE FOUND
      IF (ALPHAD-DDELA) 15,15,16
   16 ALPHAD=ALPHAD+180.
      IF(ALPHAD-360.) 15,15,92
   92 GO TO 105
   15 ALPHA =(ALPHAD*PI)/180.
      TANA=SINF(ALPHA)/COSF(ALPHA)
      TANA2=TANA*TANA
      IF (ALPHAD-90.) 44,40,44
   44 IF (ALPHAD-270.) 48,40,48
   48 SIG3A=((2.*SIG0A-2.*T2A*TANA+2.*SIG2A*TANA2)/(1.+TANA2))-SIG2A
C  SIG3A=NORMAL STRESS ON PLANE AT ANGLE ALPHA -(ACTIVE)
      T3A=T2A+(SIG3A-SIG2A)*TANA
C  T3A=SHEAR STRESS ON PLANE AT ANGLE ALPHA -(ACTIVE)
      GO TO 41
   40 SIG3A=SIG2A
      T3A=-T2A
   41 P3A=SQRTF(SIG3A*SIG3A+T3A*T3A)
C  P3A=RESULTANT STRESS ON PLANE AT ANGLE ALPHA -(ACTIVE)
   24 PRINT 25 ,ALPHAD,SIG3A,T3A,P3A
   25 FORMAT (1H0,24X,F6.1,9X,3F16.1)
  105 PRINT 66,Z,DDELP
   66 FORMAT (1H1,3H Z=,F5.1,11X,14HDELTA PASSIVE=,F6.1)
      PRINT 70
   70 FORMAT(1H0///,19X,4HSIG1,13X,2HT1,13X,5HSIG0P,11X,5HSIG2P,12X,
     13HT2P)
      PRINT 21, SIG1,T1,SIG0P,SIG2P,T2P
      PRINT 230
  230 FORMAT(1H0,25X,5HALPHA,21X,5HSIG3P,12X,3HT3P,13X,3HP3P)
      IF (SIG0P-SIG2P) 81,82,82
   82 DO 78 IALPHA=N,360,N
      ALPHAD=IALPHA
      IF (ALPHAD-DDELP) 115,115,116
  116 ALPHAD=ALPHAD+180.
```

```
      IF(ALPHAD-360.) 115,115,71
   71 GO TO 51
  115 ALPHA =(ALPHAD*PI)/180.
      TANA=SINF(ALPHA)/COSF(ALPHA)
      TANA2=TANA*TANA
      IF (ALPHAD-90.)76,74,76
   76 IF (ALPHAD-270.) 73,74,73
   73 SIG3P=((2.*SIG0P-2.*T2P*TANA+2.*SIG2P*TANA2)/(1.+TANA2))-SIG2P
C  SIG3P=NORMAL STRESS ON PLANE AT ANGLE ALPHA -(PASSIVE)
      T3P=T2P+(SIG3P-SIG2P)*TANA
C  T3P=SHEAR STRESS ON PLANE AT ANGLE ALPHA -(PASSIVE)
      GO TO 75
   74 SIG3P=SIG2R
      T3P=-T2P
   75 P3P=SQRTF(SIG3P*SIG3P+T3P*T3P)
C  P3P=RESULTANT STRESS ON PLANE AT ANGLE ALPHA -(PASSIVE)
   78 PRINT 25 ,ALPHAD,SIG3P,T3P,P3P
      GO TO 51
   81 DO 84 IALPHA=N,360,N
   87 ALPHAD=IALPHA
      IF (ALPHAD+180.-DDELP) 84,85,85
   85 IF (ALPHAD-DDELP) 86,51,51
   86 ALPHA=(ALPHAD*PI)/180.
      TANA=SINF(ALPHA)/COSF(ALPHA)
      TANA2=TANA*TANA
      IF (ALPHAD-90.)91,99,91
   91 IF (ALPHAD-270.) 93,99,93
   93 SIG3P=((2.*SIG0P-2.*T2P*TANA+2.*SIG2P*TANA2)/(1.+TANA2))-SIG2P
      T3P=T2P+(SIG3P-SIG2P)*TANA
      GO TO 94
   99 SIG3P=SIG2P
      T3P=-T2P
   94 P3P=SQRTF(SIG3P*SIG3P+T3P*T3P)
   95 PRINT 25,ALPHAD,SIG3P,T3P,P3P
   84 CONTINUE
   51 CONTINUE
 1005 CALL EXIT
      END
```

LITERATURE CONSULTED

Andersen, P., Substructure Analysis and Design, The Ronald Press Company, New York, 1956.

Capper, P. L. and Cassie, W. F., The Mechanics of Engineering Soils, E. and F. N. Spon, London, England, 1960.

Martin, G. L., A General Solution for Active and Passive Pressures on a Vertical Plane in a Sloping Earth Mass of Infinite Length, Unpublished Master's Thesis, Oregon State College, June 1961.

Martin, G. L., "Thoughts on Rankine Earth Pressure," Proceedings of the Fourth Annual Engineering Geology and Soils Engineering Symposium, Moscow, Idaho, April 1966.

Rider, P. R., Analytic Geometry, Macmillan Company, New York, 1947.

Rosenbach, J. B., Whitman, E. A., Meserve, B. E., and Whitman, P. M., Essentials of College Algebra, Ginn and Company, Boston, 1958.

Taylor, D. W., Fundamentals of Soil Mechanics, John Wiley and Sons, New York, 1965.

Terzaghi, K., Theoretical Soil Mechanics, John Wiley and Sons, New York, 1959.

MONTANA STATE UNIVERSITY LIBRARIES
3 1762 10014206 4

[redacted]

[redacted]

N378 Hartsog, W.S.
H258 A general solution
cop.2 for active and passive earth pressures

[redacted]

	NAME AND ADDRESS
2-9-71	[illegible]
2-12-71	R- 00
2-17-71	R- [illegible]
	FEB 24 71
FEB 24 71	
Lib Use	Herbert [illegible]

N378
H258
Cop. 2

[redacted]

BOUND BY HAM