The carbonization of Montana coal
by Gordon R Smith

A THESIS Submitted to the Graduate Faculty in partial fulfillment of the requirements for the degree of Master of Science in Chemical Engineering
Montana State University
© Copyright by Gordon R Smith (1954)

Abstract:
Investigations carried out show that favorable conditions exist for the establishment of a Montana coke industry. The object of this thesis is the determination of related knowledge fostering the development of such an industry.

Coals investigated for coking qualities were from the Livingston-Trail Creek, Forsyth, Electric, Red Lodge, Great Falls-Lewistown, and Bull Mountain fields of Montana. Only coal from the Livihgston-Trail Creek, Electric and Great Falls-Lewistown fields would produce coke.

Of these, coal from the Livingston-Trail Creek field appears to be the only basis for a coke industry since coal from the Electric field contains high ash and because in the Great Falls-Lewistown field the coking coal is intimately mixed with non-coking.

An estimate of $7.15 per ton as the cost of a cleaned, ready-to-coke coal is" given. On this basis, net selling cost estimates are presented for by-product plant coke and beehive plant coke* They are respectively $14.40 per ton and $12.75—per ton. A market in this area of 450,000 tons of coke and 300,000 tons of coke, breeze is indicated.

Equipment that was constructed and utilized in the experimental work is discussed and illustrated. Methods of investigations are described and data ,pertaining to the upgrading of Cokedale No. 3 coal are presented. Information concerning the three samples of coke produced in a pilot plant is given showing that byproper upgrading of the Cokedale No, 5 coal from the Livingston-Trail Creek field, a coke with a fixed carbon content of 85 percent can be produced*

THE CARBONIZATION OF MONTANA COAL

by

Gordon R. Smith

A THESIS

Submitted to the Graduate Faculty

in

partial fulfillment of the requirements

for the degree of

Master of Science in Chemical Engineering

at

Montana State College

Approved:

Lloyd Berg

Head, Major Department

Lloyd Berg

Chairman, Examining Committee

J. A. Nelson

Dean, Graduate Division

Bozeman, Montana
June, 1954

N378
Sm57e
cop 2

1098-B

TABLE OF CONTENTS

Abstract 3

Introduction 4

Equipment 8

Methods 13

Materials 17

Discussion of Results 18

Summary 23

Acknowledgment 24

Literature Cited 25

Appendix 26

112506

ABSTRACT

Investigations carried out show that favorable conditions exist for the establishment of a Montana coke industry. The object of this thesis is the determination of related knowledge fostering the development of such an industry.

Coals investigated for coking qualities were from the Livingston-Trail Creek, Forsyth, Electric, Red Lodge, Great Falls-Lewistown, and Bull Mountain fields of Montana. Only coal from the Livingston-Trail Creek, Electric and Great Falls-Lewistown fields would produce coke. Of these, coal from the Livingston-Trail Creek field appears to be the only basis for a coke industry since coal from the Electric field contains high ash and because in the Great Falls-Lewistown field the coking coal is intimately mixed with non-coking.

An estimate of $7.15 per ton as the cost of a cleaned, ready-to-coke coal is given. On this basis, net selling cost estimates are presented for by-product plant coke and beehive plant coke. They are respectively $14.40 per ton and $12.75 per ton. A market in this area of 450,000 tons of coke and 300,000 tons of coke breeze is indicated.

Equipment that was constructed and utilized in the experimental work is discussed and illustrated. Methods of investigations are described and data pertaining to the upgrading of Cokedale No. 3 coal are presented. Information concerning the three samples of coke produced in a pilot plant is given showing that by proper upgrading of the Cokedale No. 3 coal from the Livingston-Trail Creek field, a coke with a fixed carbon content of 85 percent can be produced.

INTRODUCTION

In 1952 the Engineering Experiment Station at Montana State College opened investigations into the possibility of establishing a coke industry in Montana. Investigation has revealed that conditions exist that are favorable to such an industry and may be listed as follows:

1. Readily available markets in Montana and surrounding areas.
2. Present sources of supply inadequate.
3. Existence of local fields bearing coking coal.

A market for Montana coke developed primarily through the establishment of elemental phosphorus producing plants in the Intermountain area. Table 1 in the Appendix gives a list of coke users and their yearly requirements. This indicates a market for about 450,000 tons per year of coke and 300,000 tons per year of coke breeze. This market, in addition to the numerous ferrous and nonferrous metal foundaries on the West Coast, constitute an impressive market for coke. A Montana coke industry would also be exposed to overseas markets such as Hawaii and Japan.

Sources of coke in the west at present are the by-product coke plants of the steel mills at Geneva, Utah; Pueblo, Colorado; and Fontana, California. Coke is also being supplied in some quantity from Trail, British Columbia. During times of a large steel market, the steel companies utilize most of their coke output in the production of steel and as a result the coke users in this area experience difficulty in obtaining sufficient coke at reasonable prices. The phosphorus

producers use coke as a chemical in a definite stoichiometric reaction and have a problem of uniformity. Essentially, the reaction that takes place in their furnaces may be written as follows: $Ca_3(PO_4)_2 + 3SiO_2 + 5C = CaSiO_3 + 2P + 5CO$. The carbon in the form of coke must be controlled rather closely for efficient operation. When coke is obtained from many places the fixed carbon will vary considerably. This causes additional analysis and control work on the part of the phosphorus producers and it is evident that they would be willing to pay premium prices for a uniform coke produced by a local coke manufacturer geared to their demands.

Of the coal fields investigated, only coal from the Sand Coulee district in the Great Falls-Lewistown field, the Cokedale area of the Livingston-Trail Creek field, and the Electric field in southern Park county would produce coke. This may be sustantiated by the fact that coke industries have been supported by these areas in the past (4). The coke industry at Belt was faced with the costly operation of separating the coking from the non-coking coal and was abandoned for this reason. Coal from the Electric field averages about 20 percent ash and the coke industry was abandoned there because the producers could not meet the 18 percent minimum ash requirements of the users. In contrast to this is the coal from the Cokedale area which is less than 10 percent ash and produces a good quality coke. W. R. Calvert (1911) states that labor troubles caused destruction of the mine portal at Cokedale in 1908 (3). Abandonment of coking facilities resulted when competition from other sources could not be met.

This gives an indication that development of any modern coke industry in Montana would logically be carried out at the Livingston-Trail Creek field. It was estimated that two billion tons of coal remained to be mined in this field (4). This would serve an 800,000 ton per year coke industry with about two thousand years' supply. For this reason most of the developmental work in this thesis has been concerned with coal from this source. Railroad freight rates from Livingston to coke-using centers in the region are given in Table 2 in the Appendix. They are tentative but would be no higher than listed.

The Cokedale coal field was inspected by W. J. Shields, Chief Engineer of the Rochester and Pittsburgh Coal Company, Indiana, Pennsylvania (8) and he estimated the cost of mining as follows:

Cost Item	Cost per Ton of Washed Coal
Labor	$3.50
Supplies	0.75
Royalty	0.50
Depreciation	1.00
Power	0.30
Trucking	0.60
Tipple Labor	0.40
Total	$7.15

This is based on a cleaning plant to produce specification ash content and that not more than 20 percent of the coal will end up as rejects from the washing operation.

A cost estimate of 1 - 2 million dollars is given in Table 3 in the Appendix for a by-product coke plant to produce 838 tons of coke per day. Without considering administrative expenses, interest on investment, depreciation, working capital and all city, state and federal taxes, the net cost of coke would be $11.30. This price is based on a ready-to-coke coal cost of $7.15, and a by-product gas credit of $1.11 per ton of coke. The coal cost is reasonable but probably no gas credit could be obtained for the low heating-value by-product gas due to the abundance of low-cost natural gas in the area. Including a cost of about $2.00 per ton for amortization, taxes and administrative expense and omitting the $1.11 gas credit, the cost of finished coke becomes about $14.40 per ton. It should be noted here that a by-product plant has little or no flexibility. Once heated, the chambers must be kept hot for the entire life of the oven, 20 years or more, because once cooled, cracks in the brickwork appear and the chambers are no longer gas-tight.

A modern beehive plant can produce coke at a cost of $1.50 per ton (8) which includes amortization of investment as well as operational costs. In addition, it is characterized by lower initial investment and complete flexibility. Each beehive oven produces a batch of 6 - 8 tons of coke every 72 hours. They may be shut down and reheated without harm to the ovens. The cost of beehive coke therefore is: $7.15 per ton of clean coal ÷ 0.63 = $11.25 per ton of coke + $1.50 coking cost = $12.75 per ton of finished coke f.o.b. plant. It then becomes evident that the beehive plant would be more ideal for the size of market that a

Montana coke industry would initially serve.

The first part of this program was carried out and reported by R. Herzel (5). Work concerning construction and development of necessary equipment for the investigation of carbonizing properties of Montana coals was done. Some experimental work utilizing this equipment was completed. In the period concerned by this thesis, work was continued on the compilation of carbonizing properties. In addition the determination of coal-upgrading data necessary in selecting commercial coal grading equipment was done. Some equipment and techniques were developed in support of this work.

EQUIPMENT

At the start of this thesis, the equipment available for use in connection with this project was a pilot coke plant and accessory equipment. Additional equipment that was constructed consisted of a high temperature electric muffle furnace for sample analysis, a bench scale by-product coke plant, a new roof for the pilot coke plant electric oven, a flotation apparatus for fine coal, and equipment to carry out free-swelling tests on coal.

Construction of High Temperature Muffle Furnace

The electric muffle furnace was designed for temperatures approaching 1000° C. A maximum of four and one half kilowatts of power was provided by a 0-135 volt Powerstat. Heating elements consisted of 80 feet of No. 18 B & S gage Nichrome V resistance wire wound in a series

of eight 1/2-inch diameter coils. The design temperature could be reached in about four hours at maximum power.

The dimensions of the furnace are given in Figure 1 in the Appendix. Section A is shown in Figure 2 and section B is shown in Figure 3. The containing shell of the furnace was constructed of 1/4-inch pressed asbestos board held together by 2-inch aluminum angles and No. 10 stove bolts. The muffle was constructed of Armstrong A-20 insulating fire bricks arranged as shown in the sectional drawings. Insulation was provided by finely ground magnesia. Location of the muffle in the shell was accomplished by placing split bricks under the muffle and resting these on flat iron supports. The complete furnace was raised and supported by two pine strips. An Armstrong A-20 fire brick shaped to fit, with an asbestos wrapped bolt as a handle, served as a door to the muffle. The heating elements were placed in the bricks by drilling 9/16-inch holes and slotting them as is shown in Figures 2 and 3 in the Appendix. Arrangements for easy removal and replacement were provided for by notching the ends of the bricks containing the elements. Temperature measurement was provided by installing a chromel-alumel thermocouple in one end of the furnace. An oxidizing atmosphere necessary for the combustion of the samples was provided by blowing a small jet of air into the muffle through a stainless steel tube installed at the end of the furnace.

Bench Scale By-Product Coke Plant

A bench scale by-product coke plant was assembled as an accessory

to the muffle furnace just described. A schematic illustration of this apparatus is given in Figure 4.

The retort was constructed from a threaded piece of $2\frac{1}{2}$-inch black pipe and a $2\frac{1}{2}$-inch coupling. Both the pipe and coupling are closed on one end by fitting and welding pieces of flat iron to them. The coupling and pipe were graphited and repeatedly screwed together until a smooth tight fit was accomplished. The off-gas pipe was fitted to the retort by drilling and tapping the coupling at the top. The complete retort was bolted to a brick door in the manner shown in the illustration.

The gas-scrubbing train consisted of a tar trap, water cooled condenser and a packed scrubber column. The tar trap was assembled from a 3/4-inch pipe tee, bushed on the runs to 1/4-inch pipe size, and a 3/4-inch nipple and cap. The condenser was assembled from lengths of 1/4- and 3/4-inch pipe, two 3/4-inch tees and suitable bushings. The two tees were screwed to the threaded ends of the length of 3/4-inch pipe. The 1/4-inch pipe was then inserted through the 3/4-inch pipe and oversize bushings that were screwed into the tees. The 1/4-inch pipe was brazed in place and bushings and nipples screwed into the side outlets of the tees for water connection. A bottle was provided at the end of the condenser to collect condensed oil and moisture. The scrubbing column was assembled by packing a standard glass condenser with 1/4-inch porcelain beads and mounting it on a flask as shown in Figure 4. Solvent was pumped to the top of the column with a bellows pump. The dry gas from the scrubbing column was burned in an ordinary

Bunsen burner. The scrubbing train was connected throughout with suitable tubing and coupled to the retort with a screwed union.

Roof Construction for Pilot Coke Plant Electric Oven

Armstrong A-20 insulating fire bricks were used throughout the construction of the new roof and door for the pilot coke plant electric oven because of their light weight and insulating properties. The bricks were suspended from a steel frame which acted as a structural member of the roof and also served to support the furnace doors. The frame was constructed from $1\frac{1}{2}$- by 3-inch angle iron 1/4-inch thick. Construction details are shown in Figure 5 in the Appendix. Each of the bricks was supported from the frame by two 7/16-inch machine bolts with 1/2-inch nominal washers being placed at contact point with the bricks. Latite high-temperature mortar was used throughout the construction and a thin solution was painted on all surfaces exposed to the interior of the furnace. The roof was placed on the furnace and Zonolite insulation filled in around the frames. The entire top was covered by 0.020-inch aluminum sheeting. Figure 6 shows the original construction.

Construction of Fine-Coal Flotation Apparatus

Previous experience with carbon tetrachloride density solutions indicated that the flotation equipment should be designed essentially fume-free to avoid the toxic effect of the vapors. Figure 7 shows a schematic diagram of the system that was developed. Figure 8 is a two-sectional drawing of the flotation hopper.

Each of the solution bottles contained one and one half gallons of a solution of different density. The solutions were moved about the

system by means of vacuum and air pressure through 5/16-inch and 1/4-inch copper tubing and flared or compression-joint brass fittings. The hopper was constructed from No. 20 gage galvanized sheet metal utilizing lap-solder joint construction. A 100-mesh per inch screen was placed in the bottom of the hopper to maintain the coal in the hopper during solution changes and a gate was provided to divert the upper part of the solution containing the floats out through the side manifold. The floats were separated from the solution by filtration in a Buchner funnel.

A typical run was carried out in the following manner. A 200-gram weighed sample of coal ground to minus 20-mesh was placed in the hopper and the least dense solution forced in through valve C, filling the hopper. The coal and solution was mixed by working the gate handle back and forth and then the mixture was allowed to settle for at least 30 minutes with the gate in the vertical position. At the completion of this time, the gate was slowly closed and the solution containing the floats drawn off to the filter funnel through the side manifold and valve B. Any coal sticking to the sides of the hopper was washed down by admitting a spray of fluid through valve A. The remainder of the fluid was drawn off through valve D back to the proper bottle along with the solution that was removed from the bottom of the filter funnel. This operation was repeated until all succeedingly more dense solutions had been used. The weight of the "sinks" after the last flotation that remained in the hopper was determined by difference.

Free-Swelling Index Apparatus

The equipment necessary for the performance of this test is described by the American Society for Testing Materials (1). The test bears the ASTM designation D 720-46. A schematic illustration is given of this equipment in Figure 9.

METHODS

Carbonization of Montana Coal

The basic steps involved in investigating samples of coal are sampling, determination of the coking and general qualities, and pilot plant coking. These steps may not all be used depending upon the characteristic of the sample. Sampling of the coal was generally done by methods outlined by the American Society for Testing Materials (1). Coking quality refers to a coal's ability to form coke and the type of coke that it will make. General quality refers to the ash content and the extent of oxidation of the coal sample. The determination of general quality is explained in the Ashing Coal and Coke Samples and the Free-Swelling Index sections. Progressive steps in determining coking quality were carried out by heating in a crucible and coking in the bench scale coke plant. If a sample of coal produced favorable results in each of the above steps then a larger sample of coal was coked in the pilot plant. Preparation of a coal sample consisted of one of two methods; sizing and then coking the raw sample; upgrading the sample using previously determined upgrading data, and then coking. The

determination of the upgrading data is explained in the designated section.

After preparation of the large sample of coal using the upgrading data determined, the coal was placed in a prepared retort and the lid welded on. The retort was then charged to the heated furnace and coked for about one hour per inch of retort diameter at the desired temperature. The power to the furnace was turned off allowing the retort to cool before removal. After the retort was removed from the furnace, coke removal from the retort was facilitated by cutting the lid off with an oxy-acetylene torch. If the sample had the desired properties it was sent to regional coke-users for evaluation.

Determination of Coal Upgrading Data

If it was decided to investigate further a favorable sample of coal for coke production then upgrading data were determined. Since most commercial upgrading equipment operates using density differences for ash removal then density segregation data are desirable for determining which machine may be applied to the specific job. Methods of obtaining these data were similar to those outlined by the Bureau of Mines (2,6).

"Mine-run" samples of coal were obtained and segregated according to size using 3-, 1½-, 3/4-, 3/8-, 3/16-inch and 20-mesh per inch, Tyler screens. Each of the size segregations were then floated on carbon tetrachloride-isopropyl alcohol solutions having specific gravities 1.50, 1.45, 1.40, 1.35, and 1.30. Size-density distribution of the coal sample could then be determined and utilized for sample upgrading.

The fine-coal flotation apparatus previously described was constructed in an endeavor to determine the ash distribution in the coal by density. Fine coal is described by the Bureau of Mines as that which will pass through a 20-mesh per inch screen (6). A sample of the coal under consideration was obtained and ground to fine coal size. It was then segregated into density fractions and each fraction analysed for ash content. For convenience of use in applying the data obtained, a plot of percent ash versus percent recovery was made.

Upgrading Coal for Sample Production

In the preparation of coal for the production of a coke sample in the pilot plant, density solutions of carbon tetrachloride-isopropyl alcohol, carbon tetrachloride-normal heptane and zinc chloride-water were used. In general the solution would be contained in a vat and the coal floated on it. The "floats" were removed after each fresh addition of coal and the "sinks" allowed to remain in the bottom of the vat until completion of the process. After sufficient "floats" were obtained they were charged to the retort and coked.

If any size preparation was to be made it was carried out utilizing a small jaw crusher and a small hammermill. Screening was done with a set of Tyler screens or with apparatus constructed for the individual case.

Analysis of Coke and Coal Samples

Analyses carried out in this thesis may be grouped into ash determinations, proximate analyses, sulphur determinations, and free-

swelling index determinations. Since ash content was of primary importance in this investigation a proximate analysis was carried out only in special cases. Reference was made to Parr for accepted methods of solid fuel analysis (7) and to ASTM Test D 720-46 for the free-swelling index determination (1).

Ash analysis was accomplished by first weighing out two four-gram portions of each coal sample into weighed porcelain crucibles. Most of the volatile matter was then driven off over a large Fisher burner and the samples fired in the muffle furnace for a 12 hour period at 750° to 850° C. The weight of residue was reported as ash.

Proximate analyses were made on four-gram samples of coal weighed out into crucibles. The weight of free moisture was determined by placing the sample in a drying oven at 110° C. for two hours. Combustible volatile matter weight was determined by first placing the covered crucibles over a Fisher burner until most of the volatile matter was driven off, then heating in the high temperature muffle furnace for 15 minutes at 850° to 900° C. Ash determination is described above.

Sulphur determinations were carried out by oxidizing 1/2-gram, 60-mesh per inch grind, portions of each sample in sodium peroxide bombs. The contents of each bomb were then dissolved in 100 milliliters of distilled water and the pH reduced to about 10 by the addition of HCl. After filtering out the ferric hydroxide precipitate, the pH was lowered to 3 by adding more HCl. At this point each solution was heated to boiling and an excess of barium chloride added, precipitating the sulphur as barium sulphate. The weight of the sulphur was determined by

filtering out and weighing the barium sulphate.

The above determinations although described for coal were applied to coke and char samples. Four-gram samples were used instead of one-gram samples for greater precision.

Free-swelling index determinations were carried out on coal samples obtained from core drilling the face of a coal seam. The index indicated the relative amount of coal oxidation. When cores were removed from the bit they were placed under an atmosphere of natural gas and brought to the laboratory. After grinding to 60-mesh per inch size, four one-gram portions of each sample were weighed into standard crucibles and heated using the equipment illustrated in Figure 9. The index of each coke button formed was determined by comparison of the outline of the button with a series of standard outlines. The average index to the nearest half unit was reported. If the spread of the four individual indexes was more than one unit it was required that the sample be rerun until this condition was eliminated.

MATERIALS

In the carbonization study, coals from the fields listed in Table 4 were investigated. Coal samples were solicited from all interested parties and in some cases were obtained by traveling to the field with sampling equipment and obtaining them directly. Cokedale No. 3 coal from the Livingston-Trail Creek field was obtained in this manner.

Work with miscellaneous coal samples, not connected with the direct investigation of this thesis, was done for the Montana State College

Physical Plant and for the State of Montana Purchasing Agent. Coal and char samples from the P D P Processing Company, Roundup, Montana, were analysed as an aid to their investigations.

DISCUSSION OF RESULTS

Tables 4 through 12 in the Appendix represent the results of the experimental work done in this thesis. Results of the carbonization study carried out are in Table 4. Ash analyses, including those made in the proximate analyses, are listed in Table 5. Table 6 contains the proximate analyses. Sulphur determinations are presented in Table 7 and all pertinent data concerning the runs in the pilot coke plant are given in Table 8. Table 9 contains free-swelling indexes and all coal upgrading data are contained in Tables 10, 11, and 12.

Ash Analyses and Proximate Analyses

Analyses dealing with carbonization studies were made throughout the period of this thesis. Table 4 contains a compilation of the coals worked with and indicates whether or not they coke. Ash analyses of these samples are Numbers 2, 3, 5, 6, 7, 9, 10, 11, 12, 14, 15, 17, 26, 27, and 28 in Table 5.

Ash analyses made for the P D P Processing Company at Roundup, Montana, are numbered 13, 16, 17, 25, 29, 35. These analyses were made as an aid in their developmental work in the utilization of non-coking coal for production of coal chemicals and a smokeless fuel. These

analyses are also listed in Table 6 under Proximate Analyses Numbers 3, 6, 7, 12, 13, and 14.

Coal upgrading analysis work is represented by Ash Analyses 18, 23, 24, 30, 31, 32, and 33 in Table 5. Analysis 18 was made on the various fractions of a fine-coal flotation carried out on Cokedale No. 3 coal in the fine-coal flotation apparatus. Tabulated results appear in Table 12. Analyses 23 and 24 were made on a floated sample of Cokedale No. 3 coal and the coke produced from it. Analyses 30, 31 and 32 are for the various fractions of a Cokedale No. 3 coal sample being prepared for coking, with Number 33 being of the coke produced.

Miscellaneous analyses are represented by Numbers 4, 7, 19, 20, 21, 34, and 36. Analysis 4 was made on a sample of coke picked up at the old Electric coke operations and presumably made there. The coal from Kent, Washington, in Analysis 7, was acquired for a comparison between coking coal from Washington and Montana. Analyses 19, 20, and 21 were made as services to the organizations listed. Analysis 34 was made on a sample of coke made in a beehive coke plant by the Rochester and Pittsburgh Coal Company at Indiana, Pennsylvania, to provide a comparison between eastern and western coke. Analysis 36 was made for the P D P Processing Company, Roundup, Montana, to determine the composition of a dust that collected in the off-gas pipe at their plant.

Sulphur Determinations

Sulphur determinations were made on a sample of fluid coke from Carter Oil Company at Billings, Montana, and a sample of coke that was made from Cokedale No. 3 coal. The sulphur content of the fluid coke

was made as part of an investigation to find a practical method of extracting sulphur from the coke. After a portion of the sample was placed in carbon disulphide for 24 hours the portion was analysed. The increase in sulphur was thought to be caused by some carbon disulphide remaining in the coke after extraction. The coke sample analysed was from the third coke run listed in Table 8. Its sulphur content was determined before sending it out for commercial evaluation.

Coke Runs

The coke runs that were made in the pilot coke plant during this period of work are listed in Table 8. Coal for the first run was obtained fresh from the mine and broken into walnut size pieces. After washing in water, it was placed in a prepared retort and coked. The result was a very silvery coke that had fair strength and good appearance. It was not homogenous however, due to the size of the coal used. The coking temperature was about 950° C. The principal objection to this coke, however, is its high ash content, 18.4 percent.

The second run was made on coal that was floated on a 1.45 specific gravity solution of zinc chloride. The coal was ground to minus 20-mesh in a hammermill before flotation. The coke produced had poor appearance and strength but was of fair quality, the ash content being 16.5 percent. The coke at the center of the retort was light and porous while that around the edge was more dense. It was thought that the reason for the poor appearance was that it was excessively oxidized by the zinc chloride in the flotation process. For this reason this type of

solution would not be recommended for fine-coal flotation.

The third run was made using a coal floated on a 1.40 specific gravity solution of carbon tetrachloride-normal heptane mixture. The coal was first ground in a jaw crusher with a one-inch jaw opening then screened over a 20-mesh screen. The large coal was floated and placed in the coking retort. The coke produced was of good quality with good appearance and structure and an ash content of 14 percent. It was heated at 850° C. for 14 hours and as a result contained negligible volatile matter and about 85 percent fixed carbon.

All of the retorts used in the above runs were 14-inches in diameter and 26-inches high. No data were collected on by-products.

Free-Swelling Indexes

The free-swelling indexes made are listed in Table 9. They were made on core drillings taken from an abandoned Cokedale No. 3 mine. Indexes 1 to 5 were made on core drillings taken from different depths parallel to the vein in a pillar of the mine. A dirt pocket was struck at the three-foot depth. The coal from this depth therefore did not form coke buttons. This is characteristic of Cokedale No. 3 coal in that the variation of coal quality throughout the vein was extensive.

Free-Swelling Indexes 6, 7, and 8 also indicate the presence of a dirt pocket at the three-foot level. However, both this and the above determination indicate no excessive oxidation. Indexes 9 to 14 were made on coal from another spot in the mine nearer the entrance and show that this coal had undergone more oxidation than that from deeper in the mine.

Mine-Run Size Distribution of Cokedale No. 3 Coal

Table 10 presents the size distributuon of a mine-run sample of Cokedale No. 3. The term "mine-run" is used to describe the sample because it was obtained in a manner as close as possible to commercial mining. The entire 828-pound sample of the coal was screened through Tyler screens of sizes 3-, $1\frac{1}{2}$-, 3/4-, 3/8-, 3/16-inch and 20-mesh per inch. The amount of plus 3-inch size was negligible, indicating that this coal is very friable.

Size Density Distribution of Cokedale No. 3 Coal

The data in Table 11 are the percentile distribution according to size and density of the above sample of Cokedale No. 3 coal. After the size segregation was accomplished each of the size fractions were separated according to density by floating them on succeedingly lighter solutions of carbon tetrachloride and isopropyl alcohol.

Individual and Cumulative Distribution of Ash in a Fine Ground Sample of Cokedale No. 3 Coal

Table 12 in the Appendix embodies the data obtained by the flotation of a Cokedale No. 3 coal. The coal was ground to minus 20-mesh per inch size and floated in the fine-coal flotation apparatus shown in Figure 7. Figure 10 is a plot of these data. This plot was used as a guide in floating the coal used in the third run of the pilot coke plant.

SUMMARY

1. Coal from the following areas investigated will produce coke: Sand Coulee District of Great Falls-Lewistown field, Cokedale Vein No. 3 of Livingston-Trail Creek field, Electric field in southern Park county.

2. Commercially acceptable coke was produced from Cokedale No. 3 coal from the Livingston-Trail Creek field by applying upgrading methods in its preparation.

ACKNOWLEDGEMENT

The author acknowledges with thanks the support of the Engineering Experiment Station of Montana State College which sponsored this project.

LITERATURE CITED

1. American Society for Testing Materials, 1953 Book of ASTM Standards, Part 5, Philadelphia, Pa., 1953.

2. Bird, B. M., and H. E. Messmore, The Float and Sink Test for Fine-Coal, Bur. of Mines R. I. 2586, Dept. of Intr., Washington, D. C., 1924.

3. Campbell, M. R., Contributions to Economic Geology, USGS Bulletin 471, Dept. of Intr., pp. 392, Washington D. C., 1911.

4. Combo, J. X., D. M. Brown, H. F. Pulver, and D. A. Taylor, Coal Resources of Montana, USGS Circular 53, Dept. of Intr., Washington, D. C., 1949.

5. Herzel, R., M. S. Thesis, Montana State College, 1953.

6. McMilan, E. R., and B. M. Bird, A Float and Sink Method and Apparatus for Testing Coal, Bur. of Mines R. I. 2570, Dept. of Intr., Washington D. C., 1924.

7. Parr, S. W., The Analysis of Fuel, Gas, Water and Lubricants, Fourth Ed., pp. 208, McGraw-Hill, New York, 1932.

8. Shields, W. J., Personal Communication.

APPENDIX

Table 1. Market Estimate for a Montana Coke Industry 27

Table 2. Estimated Railroad Freight Rates for Bulk Coke 28

Table 3. By-Product Coke Plant Cost Estimate 29

Table 4. Montana Coals Investigated for Coking Qualities 31

Table 5. Ash Analyses 32

Table 6. Proximate Analyses 35

Table 7. Sulphur Determinations 37

Table 8. Pilot Coke Plant Runs 38

Table 9. Free-Swelling Indexes 39

Table 10. Mine-Run Size Distribution of Cokedale No. 3 Coal 40

Table 11. Size-Density Distribution of Cokedale No. 3 Coal 41

Table 12. Individual and Cumulative Distribution of Ash in a Fine Ground Sample of Cokedale No. 3 Coal 42

Figure 1. High temperature muffle furnace 43

Figure 2. Section A of high temperature muffle furnace 44

Figure 3. Section B of high temperature muffle furnace 45

Figure 4. Schematic illustration of bench scale coke plant 46

Figure 5. Cross-section showing roof and door construction ..... of electric coke furnace 47

Figure 6. Cross-section showing original furnace construction .. 48

Figure 7. Schematic diagram of flotation apparatus 49

Figure 8. Cross-section showing details of hopper construction . 50

Figure 9. Schematic illustration of free-swelling index equipment 51

Figure 10. Plot of upgrading data represented in Table 12 52

Table 1.

MARKET ESTIMATE FOR A MONTANA COKE INDUSTRY

Plant and Location	Yearly Tonnage	Price Now Being Paid per Ton Coke	Freight	Present Source
Westvaco Chemical Division Pocatello, Idaho	200,000	$ 15.00	$ 5.50 11.00	Geneva, Utah Cleveland, Ohio
Victor Chemical Works Silver Bow, Montana	100,000	15.00	7.00 11.00	Geneva, Utah South Chicago, Illinois
Monsanto Chemical Co. Soda Springs, Idaho	100,000	15.00	4.55	Geneva, Utah
American Smelting and Refining Co. East Helena, Montana	300,000 (breeze)	10.00	5.00	Trail, British Columbia
Anaconda Copper Mining Co. Anaconda and Great Falls, Montana	20,000 (P coke) 2,000 (foundry)	10.00 20.00	7.00 9.00	Geneva, Utah Pueblo, Colorado
Great Western Sugar Co. Billings, Montana	500	20.00	8.25	Pueblo, Colorado
Great Western Sugar Co. Lovell, Wyoming	500	———	———	———
Holly Sugar Co. Hardin and Sidney, Montana	500 500	——— ———	——— ———	——— ———
Utah-Idaho Sugar Co. Chinook, Montana Sugar City, Idaho Wheeler and Toppenish, Wash.	500 500 1,000	——— ——— ———	——— ——— ———	——— ——— ———

Table 2.

ESTIMATED RAILROAD FREIGHT RATES FOR BULK COKE *

Livingston, Montana to:	Rate per Short Ton
East Helena, Montana	$ 4.00
Anaconda, Montana	4.15
Silver Bow, Montana	4.15
Pocatello, Idaho	6.00
Portland, Oregon	7.55
Seattle, Washington	7.95

* Made by P. A. Walsh, General Freight Agent, Northern Pacific Railway, Saint Paul, Minnesota

Table 3.

BY-PRODUCT COKE PLANT COST ESTIMATE *

Basis.

1. 1330 tons of coal per day at 63 percent conversion to coke or 838 tons of coke per day.

2. By-product gas credit of 15 cents per thousand cubic feet of gas or $1.11 per ton of coke.

3. Estimated cost exclusive of administrative expense, interest on investment, depreciation, city or state tax, working capital, and federal income tax.

4. Treated coal ready to coke $7.15 per ton.

Operational costs per day.

1. Operating labor	$ 1,733
2. Repairs and maintenance: Labor	495
Materials	250
3. Operating utilities	638
4. By-product plant supplies	363
5. Miscellaneous expense (shop insurance, office and shop vacations, etc)	1,221
6. Coal charged	9,500
Total manufacturing expenses	$13,200

Credits per day.

1. Coal tar, 13,300 gal. at 9 cents per gal.	$ 1,197
2. Ammonium sulphate, 16 tons at $35 per ton	560
3. Gas surplus, 9,310,000 cf at 15 cents per Mcf	931
4. Light oil, 200 gal. at 15 cents per gal.	30
5. Coke breeze, 66.5 net tons (5 percent of coal) at $3	200

Table 3. (continued)

BY-PRODUCT COKE PLANT COST ESTIMATE *

Total credits ..... $ 3,748

Net manufacturing expenses per day

$13,200 - $3748 = $9452

Cost of coke per ton

$9452/(0.63 X 1330) = $11.30

Cost of plant

$1,000,000 to $2,000,000

* Estimate made by Koppers Company, Pittsburgh, Pennsylvania

Table 4.

MONTANA COALS INVESTIGATED FOR COKING QUALITIES

Coals	Field	Coking	Remarks
Cokedale No. 3	Livingston-Trail Creek	Yes	From an abandoned mine near the old Cokedale mining area
Cokedale No. 4	Livingston-Trail Creek	No	From an outcropping
Cokedale No. 5	Livingston-Trail Creek	No	From several locations along the field
Colstrip	Forsyth	No	From Rosebud bed
Electric No. 1	Electric	Yes	From center of a coal pile at old coke operations
Electric No. 2	Electric	No	From an outcropping
Washoe	Red Lodge	No	
Belt	Great Falls-Lewistown	No	From upper vein in Sand Coulee district
Belt	Great Falls-Lewistown	Yes	From lower vein in Sand Coulee district
Roundup	Bull Mountain	No	From PDP Processing Co., Roundup, Montana
Bearcreek No. 2	Red Lodge	No	From seam No. 2
Bearcreek No. 3	Red Lodge	No	From seam No. 3
Bearcreek No. 4	Red Lodge	No	From seam No. 4

Table 5.

ASH ANALYSES

Number	Date	Coal and Remarks	Percent ash
1	9-30-53	Coal made from Cokedale No. 3 coal on September 4, 1953.	18.4
2	10- 9-53	Electric No. 1 coal	18.5
3	10- 9-53	Electric No. 2 coal	12.1
4	10-22-53	Coke picked up at site of old coke operations at Electric coal fields	18.0
5	11- 2-53	Cokedale No. 5 coal from an air shaft	5.83
6	11- 2-53	Cokedale No. 5 coal from an old mine	8.56
7	12-12-53	Coal from Kent, Washington	23.9 26.6
8	12-13-53	Washoe, Montana coal	6.68 6.71
9	12-13-53	Cokedale No. 4 coal from an outcropping	12.71 10.20
10	12-13-53	Coal from Colstrip, Montana strip mine	7.79 6.90
11	1- 6-54	Coal from Belt, Montana (upper vein)	14.38 13.80
12	1-15-54	Cokedale No. 5 coal from Section 23 obtained by blasting into outcropping	49.4 49.7
13	1-19-54	Char from PDP Processing Co., Roundup, Montana	9.26 9.25
14	1-29-54	Cokedale No. 3 coal from pillar in abandoned mine	10.34 10.32
15	1-30-54	Coal from Belt, Montana (lower vein)	14.22 13.80
16	2-10-54	Char from PDP Processing Co., Roundup, Montana	34.00 33.00

Table 5. (continued)

ASH ANALYSES

Number	Date	Coal and Remarks		Percent Ash
17	2-10-54	Coal from PDP Processing Co., Roundup, Montana		9.00 9.20
18	2-11-54	Cokedale No. 3 coal, ground to minus 20-mesh per inch size and density segregated		
		Floats or Sinks	Specific Gravity	
		F	1.30	3.27
		F	1.30	2.66
		F	1.35	7.79
		F	1.35	7.61
		F	1.40	13.20
		F	1.40	13.60
		F	1.45	17.60
		F	1.45	17.40
		F	1.50	24.80
		F	1.50	24.80
		S	1.50	40.80
		S	1.50	41.40
19	2-13-54	Heating coal from Montana State College Physical Plant		5.55 6.02
20	2-13-54	Coal from Twin Bridges Orphanage, sample marked "Feb. 7"		11.29 11.88
21	2-13-54	Coal from Twin Bridges Orphanage, sample marked "Feb. 9"		10.57 10.27
22	2-24-54	Cokedale No. 3 coal floated on a 1.45 Sp.G. solution of $ZnCl_2$		6.30 6.10
23	2-24-54	"Sinks" from above flotation		35.22 36.10
24	3- 9-54	Coke made from coal reported in Analysis 22		16.50 16.58
25	3-13-54	Char from PDP Processing Co., Roundup, Montana		19.50 20.65

Table 5. (continued)

ASH ANALYSES

Number	Date	Coal and Remarks	Percent Ash
26	3-29-54	Coal from No. 2 seam at Bearcreek, Montana	4.84 4.83
27	3-29-54	Coal from No. 3 seam at Bearcreek, Montana	7.63 7.52
28	3-29-54	Coal from No. 4 seam at Bearcreek, Montana	6.10 5.81
29	3-29-54	Char from PDP Processing Co., Roundup, Montana	23.30 23.38
30	4-29-54	Dried coal sample of Cokedale No. 3 from abandoned mine	16.43 14.72
31	4-29-54	Coal from Analysis 30 floated on a 1.40 Sp.G. solution of CCl_4 and $n\text{-}C_7H_{16}$	8.20 8.24
32	4-29-54	"Sinks" from above flotation	49.25 47.90
33	4-29-54	Coke made from coal in Analysis 31	14.28 13.26
34	4-30-54	Coke from R & P Coal Co. beehive ovens, Indiana, Pa.	10.01 8.20
35	5-11-54	Char from PDP Processing Co., Roundup, Montana	16.76 17.05
36	5-12-54	Dust from off-gas pipe at PDP Co. retort, Roundup, Montana	41.40 41.00

Table 6.

PROXIMATE ANALYSES

Number	Date	Coal and Remarks	Percentile Analysis			
			E.M.	F.C.	V.C.M.	Ash
1	11- 2-53	Cokedale No. 5 coal from air shaft	———	53.17	41.10	5.83
2	1- 6-54	Coal from Belt, Montana (upper vein)	———	54.92	30.70	14.38
			———	55.25	30.70	14.05
3	1-19-54	Char from PDP Processing Co., Roundup, Montana	———	64.13	26.61	9.26
			———	63.85	26.90	9.25
4	1-29-54	Cokedale No. 3 coal from pillar in abandoned mine	1.59	48.06	40.01	10.34
			1.49	48.68	39.51	10.32
5	1-30-54	Coal from Belt, Montana (lower vein)	———	47.48	38.30	14.22
			———	49.10	37.10	13.80
6	2-10-54	Char from PDP Processing Co., Roundup, Montana	———	59.85	7.15	33.00
			———	59.28	6.72	34.00
7	2-10-54	Coal from PDP Processing Co., Roundup, Montana	———	42.50	48.50	9.00
			———	43.10	47.70	9.20
8	2-13-54	Heating Coal from Montana State College Physical Plant	14.10	47.28	31.90	5.55
			14.10	48.45	32.60	6.02
9	2-13-54	Coal from Twin Bridges Orphanage, sample marked "Feb 7"	13.52	33.55	31.28	11.28
			14.82	39.52	33.78	11.88
10	2-13-54	Coal from Twin Bridges Orphanage, sample marked "Feb 9"	16.92	41.33	31.48	10.27
			15.72	41.53	32.18	10.57

Table 6. (continued)

PROXIMATE ANALYSES

Number	Date	Coal and Remarks	Percentile Analysis			
			F.M.	F.C.	V.C.M.	Ash
11	3- 9-54	Coke made from Cokedale No. Coal	———	81.54	1.96	16.50
		floated on 1.45 Sp.G. solution	———	81.36	2.06	16.58
12	3-13-54	Char from PDP Processing Co.,	0.71	73.85	4.79	20.65
		Roundup, Montana	0.68	76.50	3.32	19.50
13	3-29-54	Char from PDP Processing Co.,	0.74	70.78	4.18	24.30
		Roundup, Montana	0.64	71.82	4.16	23.38
14	5-11-54	Char from PDP Processing Co.,	3.63	73.23	6.38	16.76
		Roundup, Montana	3.56	74.34	5.05	17.05

Table 7.

SULPHUR DETERMINATIONS

Number	Date	Sample and Remarks	Percent Sulphur
1	2-14-54	Fluid coke from Carter Oil Co. at Billings, Montana	6.54
2		Same	6.25
3	2-14-54	Fluid coke from Carter Oil Co. at Billings, Montana after being extracted with CS_2 for 24-hours	6.78
4		Same	6.92
5	5-11-54	Coke made from Cokedale No. 3 coal on April 29, 1954	1.29
6		Same	1.48

Table 8.

PILOT COKE PLANT RUNS

Number	Date	Coal and Remarks	Charging Temperature °C	Percentile Analysis F.C.	F.M.	V.C.M.	Ash
1	9- 4-53	Cokedale No. 3 coal broken to walnut size and charged wet to the retort.	950	71.20 71.17	—— ——	2.18 2.11	26.62 26.72
2	2-24-54	Cokedale No. 3 coal ground to minus 20-mesh in hammermill and floated on a 1.45 Sp.G. $ZnCl_2$ Solution.	850	81.54 81.36	—— ——	1.96 2.06	16.50 16.58
3	4-29-54	Cokedale No. 3 coal crushed in jaw-crusher with 1-inch opening and floated on a 1.40 Sp.G. solution of CCl_4 and $n\text{-}C_7H_{16}$	850	—— ——	0.20 0.35	—— ——	13.26 14.28

Table 9.

FREE-SWELLING INDEXES

Number	Date	Coal and Remarks	Depth	Sample 1	2	3	4	Av.
1	3- 9-54	Coal core-drilled from an abandoned Cokedale No. 3 mine pillar	surface	4	3½	4	4½	4
2			1-ft.	4½	4½	4½	4½	4½
3			2-ft.	3	3½	3½	2½	3
4			3-ft.	Non-agglomerating				—
5			4-ft.	1½	1½	1½	1½	1½
6	3-30-54	Coal core-drilled from an abandoned Cokedale No. 3 mine shaft	surface	2	1½	2	1½	1½
7			1-ft.	4	4½	4½	4½	4½
8			3-ft.	1	1½	1½	1	1½
9	3-30-54	Coal core-drilled from an abandoned Cokedale No. 3 mine shaft	surface	2½	2½	2½	2½	2½
10			1-ft.	3½	4	4	3½	4
11			2-ft.	3	4	3½	3	3½
12			2¼-ft.	3½	4½	4½	4½	4
13			3-ft.	4	4½	4	4½	4
14			4-ft.	4	5	4½	4½	4½

Table 10.

MINE-RUN SIZE DISTRIBUTION OF COKEDALE NO. 3 COAL

Size	Percent
Larger than $1\frac{1}{2}$-inches	2.04
$1\frac{1}{2}$- x 3/4-inches	6.67
3/4- x 3/8-inches	16.82
3/8- x 3/16-inches	21.35
3/16-inch x 20-mesh per inch	39.92
Smaller than 20-mesh per inch	13.20
Total	100.00

Table 11.

SIZE-DENSITY DISTRIBUTION OF COKEDALE NO. 3 COAL

Density	Tyler Screen Size				
	⧸20 mesh	⧸3/16 "	⧸3/8 "	⧸3/4 "	⧸1½ "
	24.38 %	10.89 %	8.34 %	2.45 %	0.66 %
1.50					
	1.60 %	0.48 %	0.26 %	0.10 %	0.07 %
1.45					
	1.80 %	0.83 %	0.47 %	0.27 %	0.16 %
1.40					
	2.69 %	1.76 %	1.07 %	0.47 %	0.18 %
1.35					
	3.70 %	2.00 %	1.63 %	1.63 %	0.77 %
1.30					
less	5.75 %	5.38 %	5.05 %	1.75 %	0.20 %
Totals	39.92 %	21.35 %	16.82 %	6.67 %	2.04 %

Total plus 13.20 % of less than 20-mesh ..... 100.00 %

Table 12.

INDIVIDUAL AND CUMULATIVE DISTRIBUTION OF ASH IN A FINE GROUND SAMPLE OF COKEDALE NO. 3 COAL

Density	WT. Coal	% Ash	WT. Ash	Cum. WT. Ash	% Recovery	% Ash
	50.60	2.96	1.50	1.50	50.60	2.97
1.50						
	21.49	7.70	1.65	3.15	72.09	4.37
1.45						
	12.90	13.20	1.70	4.85	84.99	5.72
1.40						
	7.13	17.50	1.25	6.10	92.12	6.63
1.35						
	4.61	24.40	1.13	7.23	96.73	7.48
1.30						
less	3.27	41.10	1.34	8.57	100.00	8.57

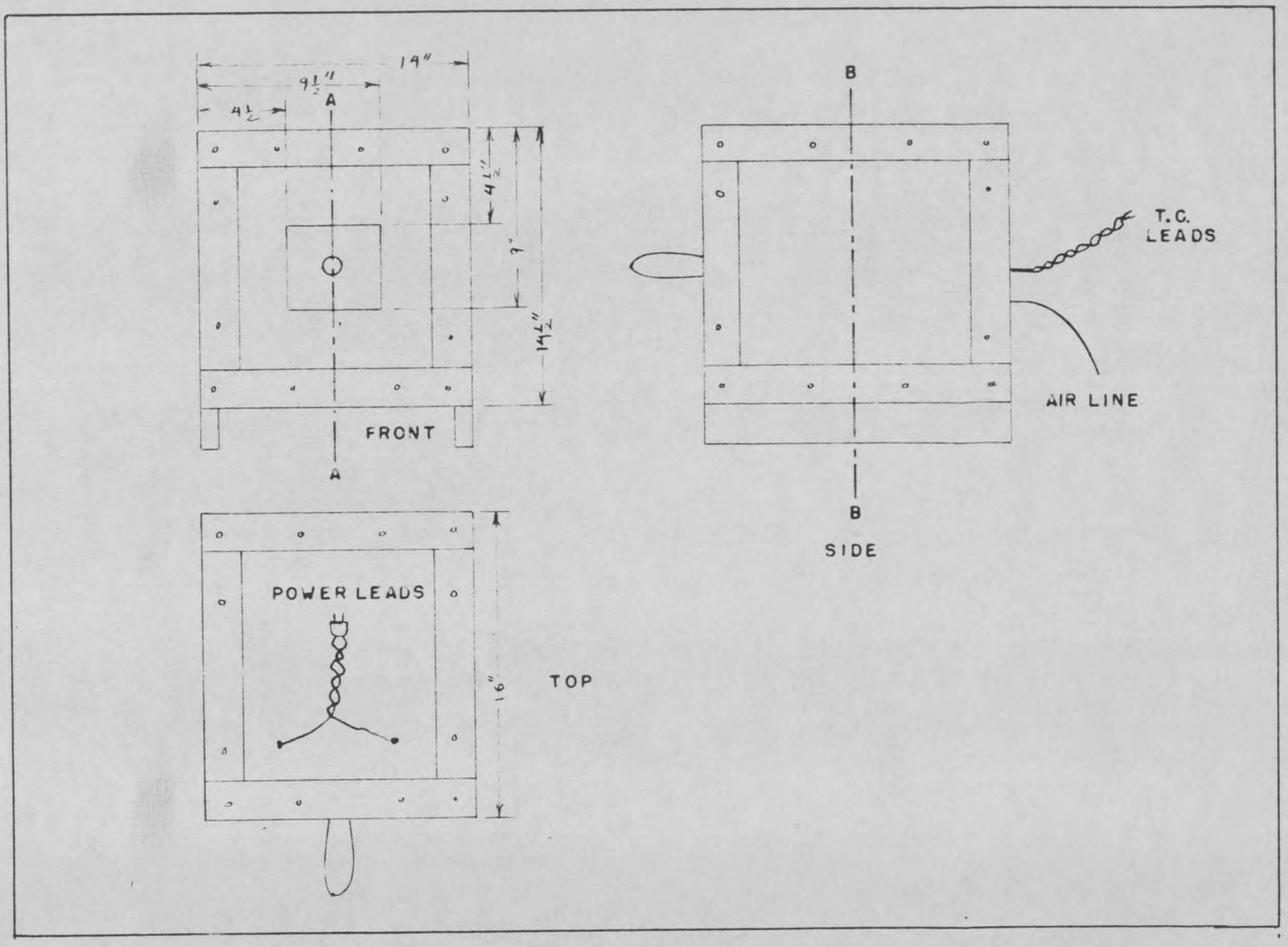
14"
9½"
4½
A
4½"
9"
14½"
FRONT
A
B
T.C.
LEADS
AIR LINE
B
SIDE
POWER LEADS
16"
TOP

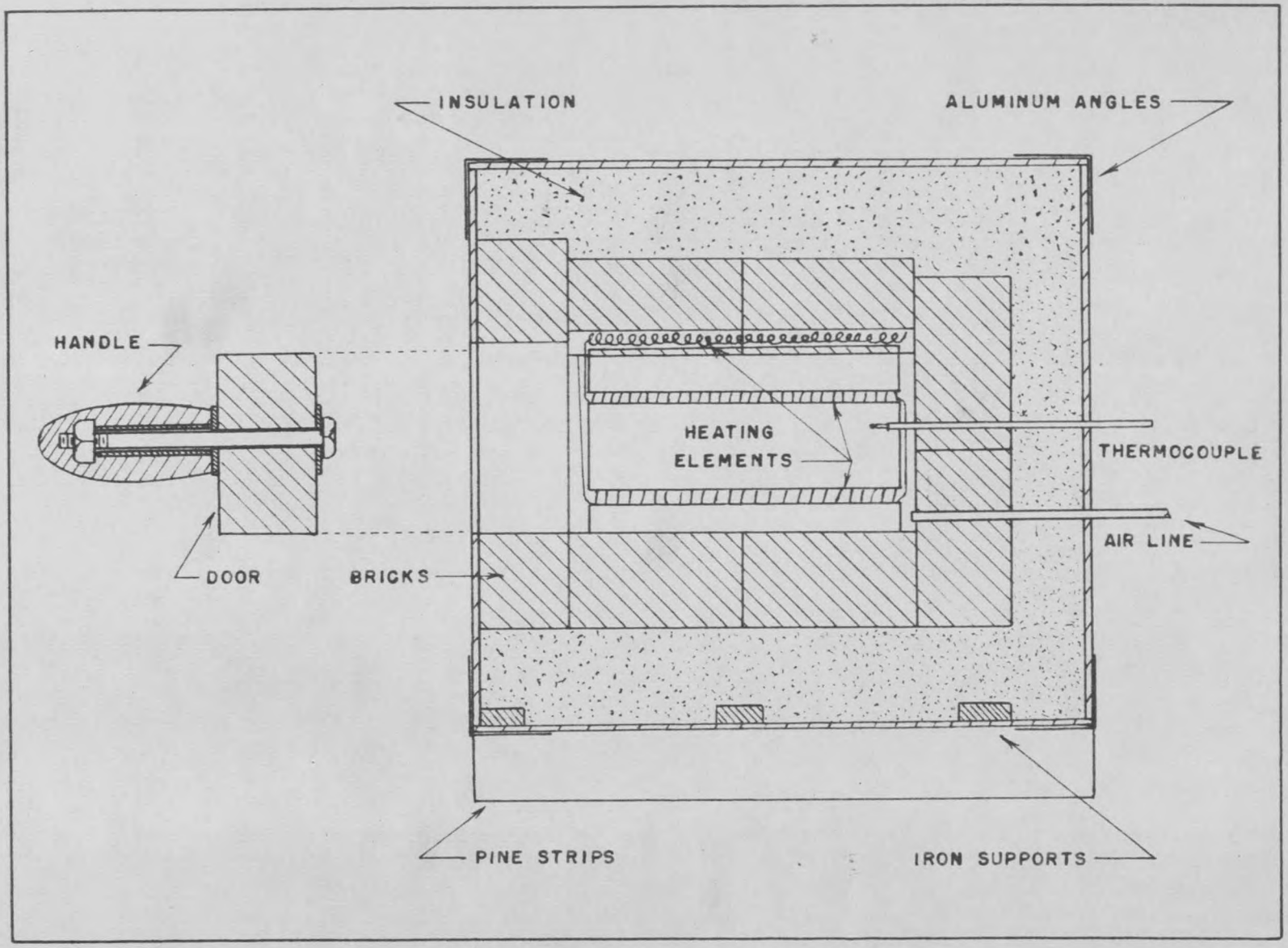

Figure 4. Section A of High Temperature Muffle Furnace

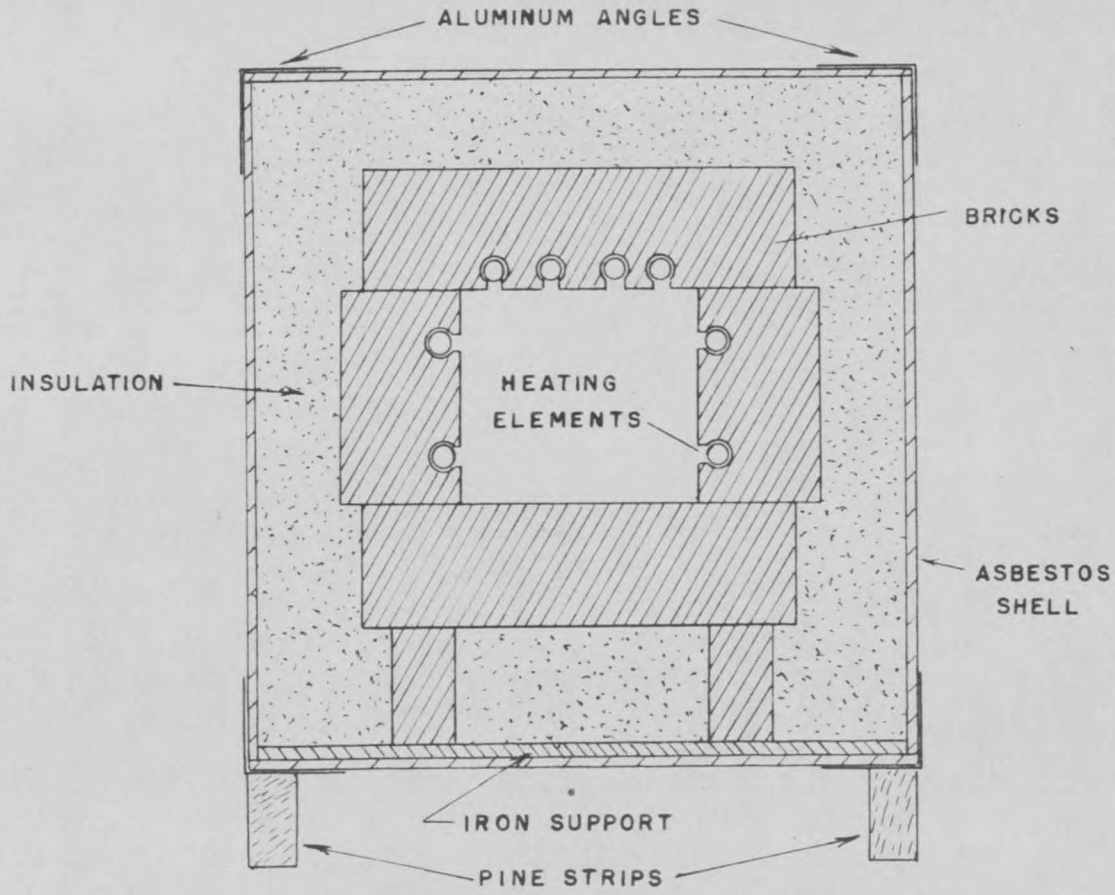

Figure 3. Section B of High Temperature Muffle Furnace

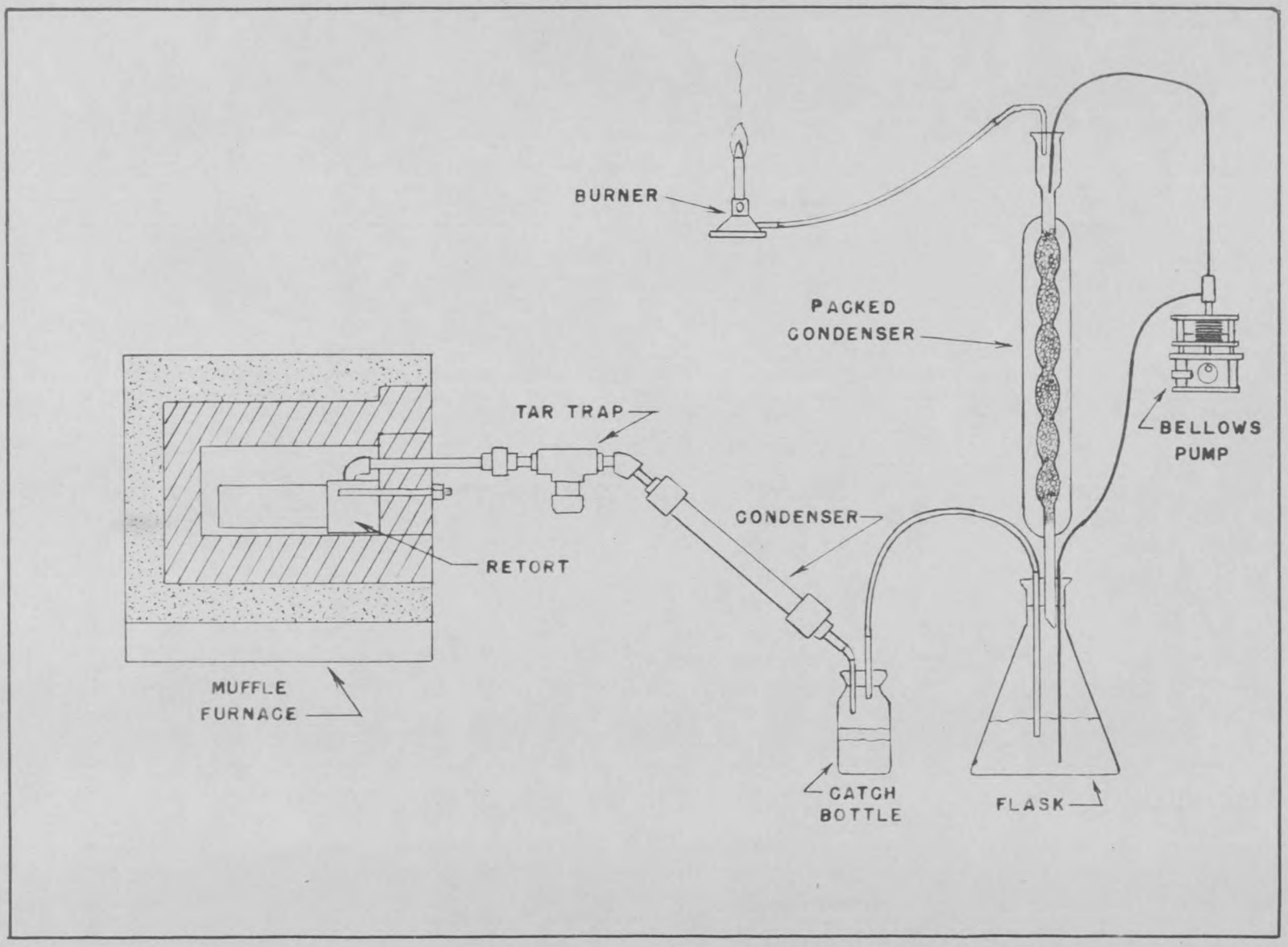

Figure 4. Schematic Illustration of Bench Scale Coke Plant

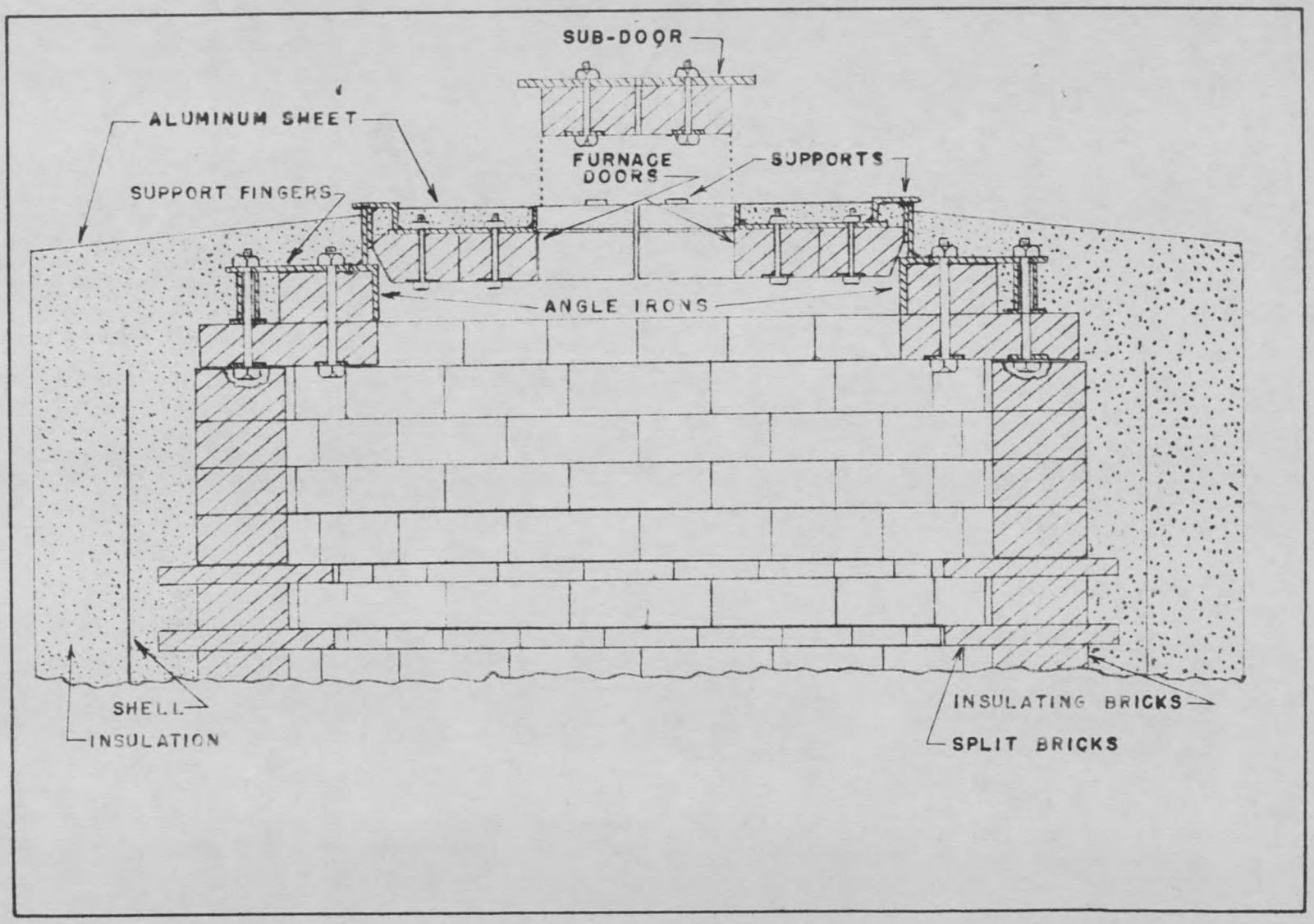

Figure 5. Cross-section showing roof and door construction of electric coke furnace.

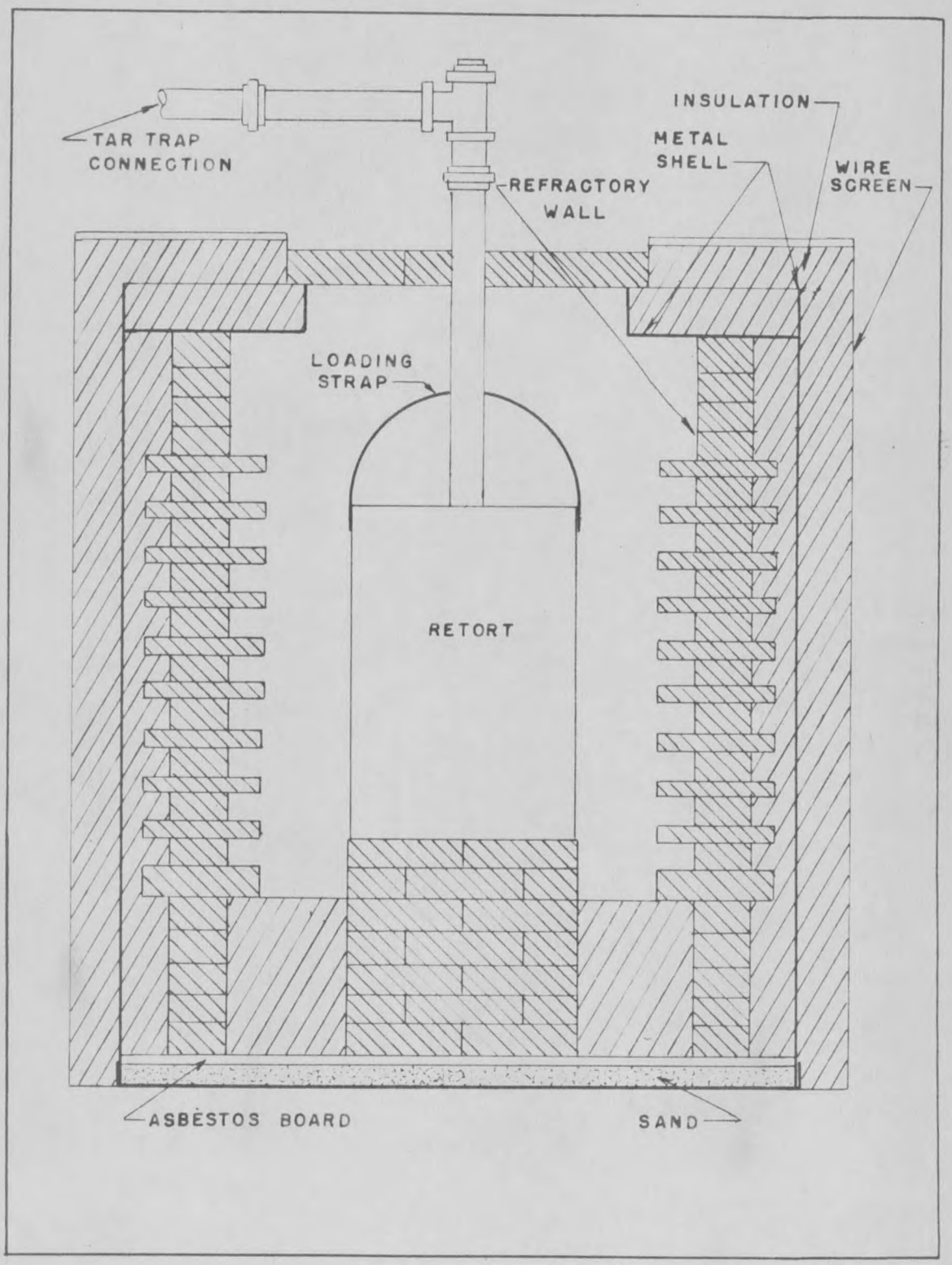

Figure 6. Cross-section showing original furnace construction.

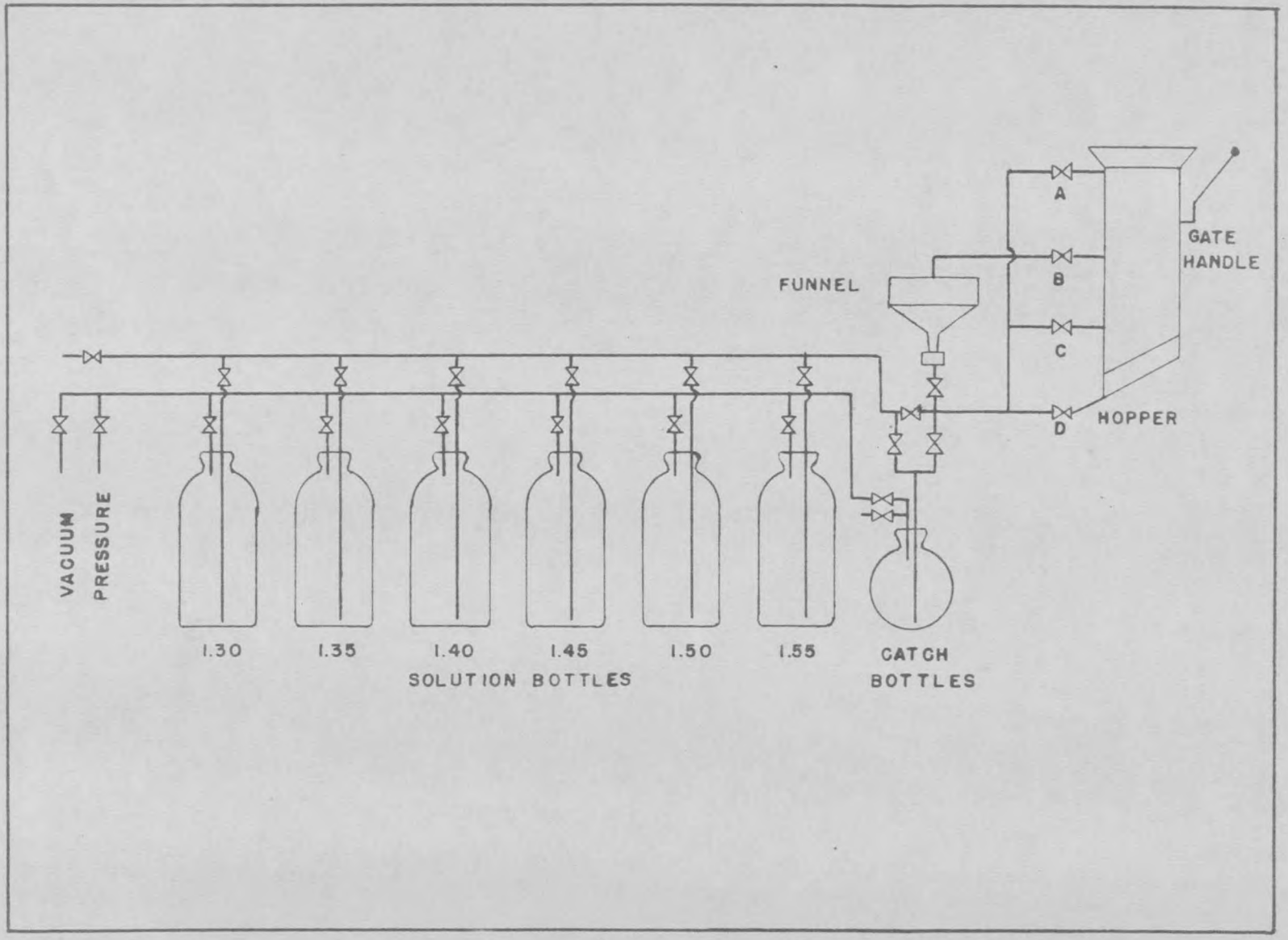

Figure 7. Schematic Diagram of Flotation Apparatus

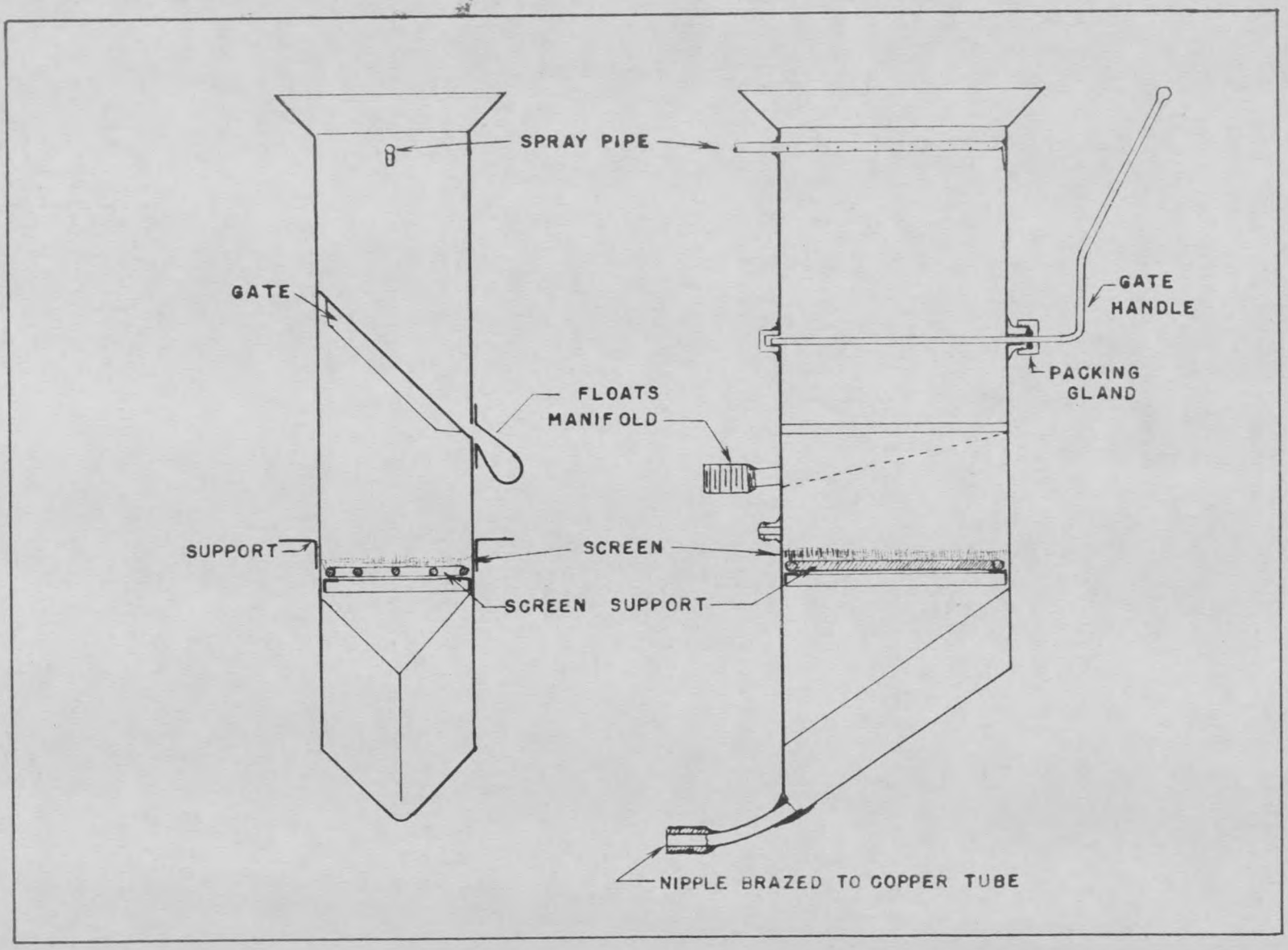

Figure 8. Cross-section showing details of hopper construction.

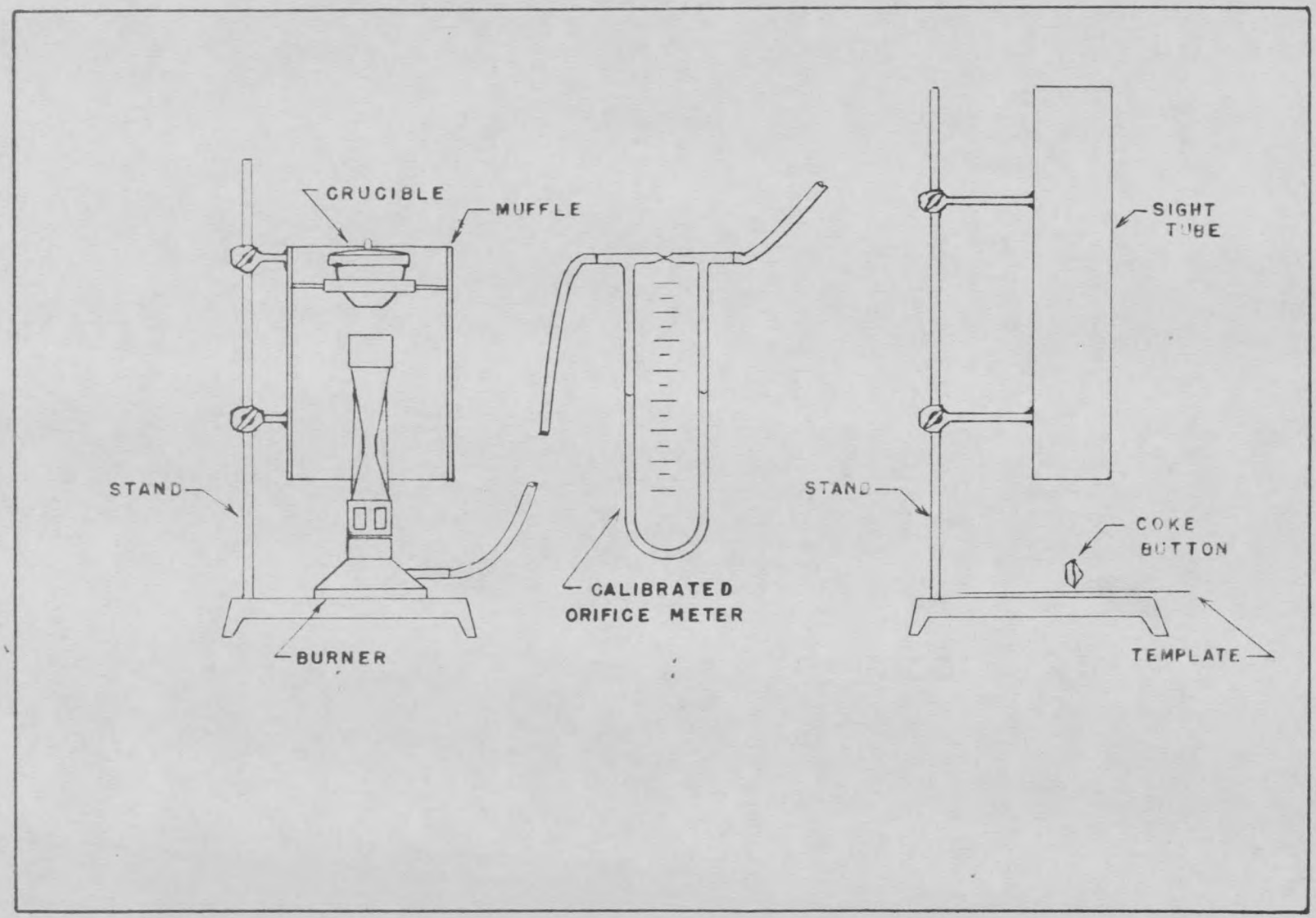

Figure 9. Schematic illustration of free-swelling index equipment.

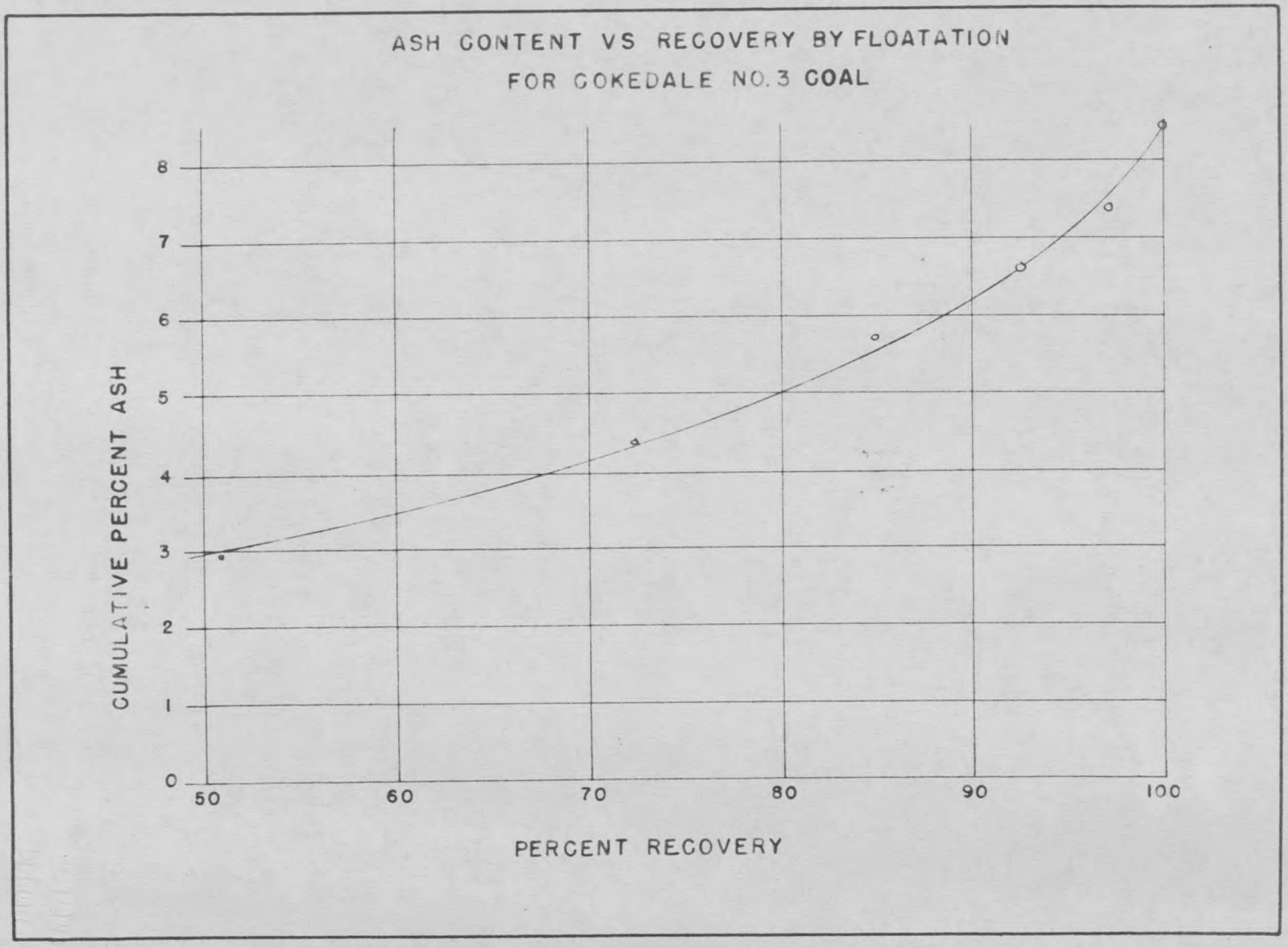

Figure 10. Plot of the upgrading data represented in Table 12.

112506

MONTANA STATE UNIVERSITY LIBRARIES
3 1762 10015510 8

N378
Sm57c cop.2 112506

Smith, Gordon R
The carbonization of Montana coal

NAME AND ADDRESS

OCT 2 '56 T. Utsumi Ch. F
OCT 16 '56
NOV 1 '56
NOV 8 '56
due Nov
MAR 4 '57
April 13

N378
Sm57c
cop.2

112506