A comprehensive analysis of pelvic measurements in beef cattle
by Barry Roger Cook

A thesis submitted in partial fulfillment of the requirements for the degree of Master of Science in Animal Science
Montana State University
© Copyright by Barry Roger Cook (1991)

Abstract:
Three experiments were performed to evaluate differences in pelvic measurements, and evaluate the effects of selection for pelvic measurements on dystocia in beef cattle. Experiment 1 involved the evaluation of pelvic measurements in bulls and analyzed the relationship with scrotal circumference (SC) , birth weight (BW), 365-d weight (WT365) and age (AGE). Eight hundred and six test station bulls representing three breeds that had completed the 1990 or 1991 performance test at the Midland Bull Test Center were included in the analyses. Breed effects were evaluated for pelvic height (PH), pelvic width (PW), pelvic area (PA; product of PH and PW), hip height (HH) and scrotal circumference (SC). Breed and linear effects of AGE, HH and WT365 were significant (P<.05) for PA. Salers were the tallest and had the largest PA when adjusted for AGE or WT365 (P<.01). Pooled linear regressions of PA on age and WT3 65 were .201 cm^2/ d and .045 cm^2/ kg. Phenotypic correlations (rp) between pelvic dimensions and HH were high (P<.01) while rp of pelvic measurements with WT365 and SC were low to moderate. Experiment 2 analyzed the relationship of PA, PH, PW, BW, WT3 65, and pelvic shape (WHRAT; PH/PW) with dystocia in 317 primiparous heifers representing four herds (HERD) of predominantly Salers and British breeding. Dystocia scores (CDS) of 1-5 were assigned at parturition to determine the severity (INTENSE) and incidence (DIFF) of dystocia. The base model included HERD, SIRE (HERD) and SEX. HERD was significant (P<.01) for both INTENSE and DIFF. Herd 1 had the highest least squares mean for INTENSE (2.54) while Herd 4 had the lowest (1.04). BW was significant (P<.Ol) in the analyses of both INTENSE and DIFF, yet PA failed to affect (P>.10) the INTENSE or DIFF analyses of dystocia. The standardized partial regression coefficients (b') were .07 and -.007 for BW and PA, respectively. Experiment 3 was a two-phase stochastic computer simulation analysis involving five replications (REP) that analyzed different selection strategies based on heifer PA (PBRD) and sire BW (SEPD), and different combinations (TRT) of calf (FC) and dam heterosis (FD) on yearling pelvic area (YRLGPA), calving pelvic area (CLVGPA), CDS, DIFF, BW and CLVGPA/BW ratio (RATIO). Simulated data were analyzed as observations and as weighted REP means. In both analyses the main effect of SEPD was significant (P<.Ol) for BW, CDS, DIFF and RATIO while PBRD was significant (P<.Ol) for YRLGA and CLVGPA. Weighted means analysis found all quadratic and interaction effects of SEPD and PBRD non-significant (P>.10). Analyses of observations found TRT to affect (P<.Ol) CDS, DIFF, BW, RATIO, YRLGPA and CLVGPA. Chi-square results showed that DIFF and CDS frequency responded more to changes in SEPD. Conclusions are that differences in PA exist in bulls between breeds, but, selection for greater PA cannot overcome the effects of calf BW on dystocia.

A COMPREHENSIVE ANALYSIS OF PELVIC MEASUREMENTS IN BEEF CATTLE

by

Barry Roger Cook

A thesis submitted in partial fulfillment
of the requirements for the degree

of

Master of Science

in

Animal Science

MONTANA STATE UNIVERSITY
Bozeman, Montana

August, 1991

N378
C7715

APPROVAL

of a thesis submitted by

Barry Roger Cook

This thesis has been read by each member of the thesis committee and has been found to be satisfactory regarding content, English usage, format, citations, bibliographic style, and consistency, and is ready for submission to the College of Graduate Studies.

9/2/91
Date

D D Kress
Chairperson, Graduate Committee

Approved for the Major Department

9/3/91
Date

J. C. Dayn
Head, Major Department

Approved for the College of Graduate Studies

9/12/91
Date

Henry J Parsons
Graduate Dean

STATEMENT OF PERMISSION TO USE

In presenting this thesis in partial fulfillment of the requirements for a master's degree at Montana State University, I agree that the Library shall make it available to borrowers under rules of the Library. Brief quotations from this thesis are allowable without special permission, provided that accurate acknowledgement of source is made.

Permission for extensive quotation from or reproduction of this thesis may be granted by my major professor, or in his absence, by the Dean of Libraries when, in the opinion of either, the proposed use of the material is for scholarly purposes. Any copying or use of the material in this thesis for financial gain shall not be allowed without my written permission.

Signature Barry Cook

Date 9-10-1991

ACKNOWLEDGEMENTS

There are many people who have contributed to the completion of this endeavor. I would like to thank Drs. Don Kress and Mike Tess whose assistance and guidance were crucial throughout my graduate program. I also would like to thank Drs. Ray Ansotegui, Roger Brownson and Clayton Marlow for their assistance and advice while on my graduate committee.

My sincere appreciation goes out to John Dhuyvetter of the American Salers Association, Leo McDonald of Midland Bull Test Center and Dr. John Smith. This project would not have been possible without their cooperation and financial support. To Wade Jacobsen, Ron Skinner, Nichols Farms and all your employees I thank you for remaining in this study through some difficult moments and collecting the necessary data. An additional thank you goes out to Jim Wilson and the crew at Wilson Ranches. Without your support I never would have gone to graduate school.

I thank the many friends who have encouraged me in times of need and inspired me to learn. Thanks to Bart Bader, Alan Danielson, Chuck Hackett, Ray Herdina, Matt Lane, Noel Owens, Wes Patton, Al Vieria and Alice Yaryan. These individuals taught me many things about life. Finally, I thank my parents, David and Trisha Cook and my grandmother Mrs. Elizabeth Horan for their continued support for my education. Without their encouragement this project would not have been possible.

TABLE OF CONTENTS

	Page
LIST OF TABLES	vii
LIST OF FIGURES	xi
ABSTRACT	xii
INTRODUCTION	1
Objectives	2
LITERATURE REVIEW	3
Cause of Dystocia	5
Maternal Effects	8
Nutrition	11
Prediction of Dystocia	11
Genetic Parameters	13
MATERIALS AND METHODS	21
Experiment 1	21
Statistical Analysis	23
Experiment 2	25
Statistical Analysis	26
Experiment 3	28
Statistical Analysis	35
RESULTS	37
Experiment 1	37
Variation	48
Effect of percentage Salers	56
Experiment 2	64
Experiment 3	76
Effect of heifer-sire selection	76
Traits of the calf	76
Traits of the dam	77
Effect of Heterosis	89
DISCUSSION	97
LITERATURE CITED	102
APPENDICES	110
A. Additional bull, heifer and simulation data	111
B. Computer program for simulation	124

LIST OF TABLES

Table Page

1. Age and 365-day weight range for Angus, Hereford and Salers bulls for 1990 and 1991. 21

2. Age, Hip Height and 365-day weight range for Angus, Hereford and Salers bulls for 1991. 22

3. Distribution of heifers by breeder and proportion Salers. 25

4. Genetic and phenotypic parameter estimates. 33

5. Means, coefficients of variation and heterosis estimates for yearling pelvic area (YRLGPA), calving pelvic area (CLVGPA) and birth weight (BW). 35

6. F-statistics from the analyses of variance for pelvic measurements in test station bulls for 1990 and 1991. 38

7. Partial regression coefficients and least squares means for Angus, Hereford and Salers yearling bulls for 1990 and 1991 39

8. F-statistics from the analyses for pelvic measurements and scrotal circumference in test station bulls 43

9. F-statistics from the analyses for pelvic measurements and scrotal circumference in test station bulls for 1991. 45

10. Partial regression coefficients and least squares means for Angus, Hereford and Salers yearling bulls for 1991. 46

11. Proportion of variance accounted for by the various models for 1990 49

12. Percent increase in variation for pelvic area (PA), pelvic width (PW), pelvic height (PH) and scrotal circumference (SC) for 1991 49

13. Percent increase in variation for pelvic area (PA), pelvic width (PW), pelvic height (PH) and scrotal circumference (SC) for 1990 and 1991. 50

LIST OF TABLES - Continued

Table Page

14. Residual phenotypic correlations for performance traits and anatomical characteristics for 1990 and 1991. 55

15. Residual phenotypic correlations for performance traits and anatomical characteristics for 1990. . . 55

16. Percent increase in variation for pelvic area (PA), pelvic width (PW), pelvic height (PH) and scrotal circumference (SC) for 1990 57

17. Percent increase in variation for pelvic area (PA), pelvic width (PW), pelvic height (PH) and scrotal circumference (SC) for 1991 58

18. Percent increase in variation for pelvic area (PA), pelvic width (PW), pelvic height (PH) and scrotal circumference (SC) for 1990 and 1991. 59

19. F-statistics from the analyses for pelvic measurements and scrotal circumference in percentage Salers bulls for 1990 and 1991. 60

20. F-statistics from the analyses of pelvic measurements and scrotal circumference in percentage Salers bulls for 1991 63

21. Least squares means for the individual traits in each herd, from the model: SEX, HERD and SIRE(HERD). 66

22. Least squares means from the analyses of variance for calving difficulty from the base model: SEX, HERD and SIRE(HERD) 66

23. Least squares means for calving difficulty and birth weight (BW) in the different sexes. 67

24. F-statistics from the analyses of serious (INTENSE) calving difficulty with different variables in the model 68

LIST OF TABLES - Continued

Table Page

25. F-statistics from the analyses of the incidence (DIFF) of calving difficulty with different variables in the model. 68

26. Percent increase in variation explained by each individual trait for dystocia 73

27. Heritability estimates and genetic, phenotypic and environmental correlations. 75

28. Defined abbreviations for all simulated variables . 76

29. F-statistics from the analyses of variance for calf and dam traits. 79

30. F-statistics from the response surface analyses of calf and dam traits 79

31. Least squares means by level of sire expected progeny difference (SEPD) for birth weight (BW) . . 80

32. Least squares means by level of percent bred (PBRD) for yearling heifers. 80

33. Range of calving difficulty score (CDS) within each mating combination. 82

34. F-statistics from the analyses of variance for calf and dam traits with different levels of heterosis . 89

35. Means for calf and dam traits with varying levels of heterosis. 93

36. Age and 365-day weight range for Angus, Hereford and Salers bulls for 1990 112

37. Partial regression coefficients and least squares means for Angus, Hereford and Salers bulls for 1990. 113

38. Partial regression coefficients and least squares means for Angus, Hereford and Salers bulls for 1991. 114

LIST OF TABLES - Continued

Table Page

39. Residual phenotypic correlations for performance traits and anatomical characteristics for 1991. . . 114

40. F-statistics from the analyses of pelvic measurements and scrotal circumference in percentage Salers bulls for 1990 115

41. Partial regression coefficients and least squares means for percentage Salers bulls for 1990 and 1991. 116

42. Partial regression coefficients and least squares means for percentage Salers bulls for 1990. 117

43. Partial regression coefficients and least squares means for percentage Salers bulls for 1991. 118

44. Partial regression coefficients and least squares means for percentage Salers bulls for 1991. 119

45. Number of calves sired by each bull in experiment 2. 120

46. F-statistics and herd regressions from the analyses of calving difficulty with the interaction of birth weight*herd (BW*HERD) in the model in experiment2. 121

47. Effect of sire and birth weight on the variation in dystocia in experiment 2 121

48. Residual phenotypic correlations for the individual traits in experiment 2 121

49. Least squares means for calving difficulty in percentage Salers in experiment 2 122

50. Least squares means for the individual traits for percentage Salers in experiment 2 123

51. Least squares means for calf traits from the heterosis analyses, when adjusted for SEX in experiment 3. 123

LIST OF FIGURES

Figure — Page

1. Biometrical relationships among simulated traits . 34
2. Regression curves for pelvic area (PA) on hip height (HH) in Angus, Hereford and Salers yearling bulls in 1991 47
3. Chi-square analysis for the incidence (DIFF) of dystocia with different levels of sire birth weight EPD (SEPD) for birth weight (BW). 83
4. Chi-square analysis for the severity (INTENSE) of dystocia with different levels of sire birth weight EPD (SEPD) for birth weight (BW). 84
5. Chi-square analysis for the incidence (DIFF) of dystocia with different percentages of heifers retained for breeding (PBRD) 85
6. Chi-square analysis for the severity (INTENSE) of dystocia with different percentages of heifers retained for breeding (PBRD) 86
7. Regression of the severity (INTENSE) of dystocia on different levels of sire EPD (SEPD) for birth weight (BW). 87
8. Regression of the severity (INTENSE) of dystocia on different percentages of heifers retained for breeding (PBRD). 88
9. Chi-square analysis of the incidence (DIFF) of dystocia with different levels of calf heterosis (FC) and dam heterosis (FD). 90
10. Chi-square analysis of the severity (INTENSE) of dystocia with different levels of calf heterosis (FC) and dam heterosis (FD). 91
11. Model utilized to simulate the effects of selection for sire birth weight (EPD) (SEPD) and heifer pelvic area (PBRD) on dystocia. 125

ABSTRACT

Three experiments were performed to evaluate differences in pelvic measurements, and evaluate the effects of selection for pelvic measurements on dystocia in beef cattle. Experiment 1 involved the evaluation of pelvic measurements in bulls and analyzed the relationship with scrotal circumference (SC), birth weight (BW), 365-d weight (WT365) and age (AGE). Eight hundred and six test station bulls representing three breeds that had completed the 1990 or 1991 performance test at the Midland Bull Test Center were included in the analyses. Breed effects were evaluated for pelvic height (PH), pelvic width (PW), pelvic area (PA; product of PH and PW), hip height (HH) and scrotal circumference (SC). Breed and linear effects of AGE, HH and WT365 were significant ($P<.05$) for PA. Salers were the tallest and had the largest PA when adjusted for AGE or WT365 ($P<.01$). Pooled linear regressions of PA on age and WT365 were .201 cm^2/ d and .045 cm^2/ kg. Phenotypic correlations (r_p) between pelvic dimensions and HH were high ($P<.01$) while r_p of pelvic measurements with WT365 and SC were low to moderate. Experiment 2 analyzed the relationship of PA, PH, PW, BW, WT365, and pelvic shape (WHRAT; PH/PW) with dystocia in 317 primiparous heifers representing four herds (HERD) of predominantly Salers and British breeding. Dystocia scores (CDS) of 1-5 were assigned at parturition to determine the severity (INTENSE) and incidence (DIFF) of dystocia. The base model included HERD, SIRE(HERD) and SEX. HERD was significant ($P<.01$) for both INTENSE and DIFF. Herd 1 had the highest least squares mean for INTENSE (2.54) while Herd 4 had the lowest (1.04). BW was significant ($P<.01$) in the analyses of both INTENSE and DIFF, yet PA failed to affect ($P>.10$) the INTENSE or DIFF analyses of dystocia. The standardized partial regression coefficients (b') were .07 and -.007 for BW and PA, respectively. Experiment 3 was a two-phase stochastic computer simulation analysis involving five replications (REP) that analyzed different selection strategies based on heifer PA (PBRD) and sire BW (SEPD), and different combinations (TRT) of calf (FC) and dam heterosis (FD) on yearling pelvic area (YRLGPA), calving pelvic area (CLVGPA), CDS, DIFF, BW and CLVGPA/BW ratio (RATIO). Simulated data were analyzed as observations and as weighted REP means. In both analyses the main effect of SEPD was significant ($P<.01$) for BW, CDS, DIFF and RATIO while PBRD was significant ($P<.01$) for YRLGA and CLVGPA. Weighted means analysis found all quadratic and interaction effects of SEPD and PBRD non-significant ($P>.10$). Analyses of observations found TRT to affect ($P<.01$) CDS, DIFF, BW, RATIO, YRLGPA and CLVGPA. Chi-square results showed that DIFF and CDS frequency responded more to changes in SEPD. Conclusions are that differences in PA exist in bulls between breeds, but, selection for greater PA cannot overcome the effects of calf BW on dystocia.

INTRODUCTION

Efficient utilization of time, labor and available resources is essential for successful production of beef cattle. Maximization of the proportion of calves weaned per cow exposed will markedly increase efficiency. However, post-natal calf loss is a recurring problem for many producers that results in a tremendous economic loss.

Environment, management and the genetic predisposition of cattle all interact to determine whether calves live or die. Thus, immediate solutions to reducing calf loss are not readily available. Since most calf losses occur as a result of dystocia, defined as difficulty at parturition, a viable starting point to reducing calf loss must integrate the factors that cause calving difficulty. Factors that have been attributed to dystocia include traits of the calf and dam.

The two main traits that have been shown to be related to dystocia include birth weight of the calf and the pelvic area of the dam. When these two traits interact in a negative fashion the affect at parturition can be disastrous. As a result, the effect of selection for dam pelvic area has received considerable attention in determining options to reduce dystocia. Additionally, calf birth weight has been scrutinized in attempts to derive solutions to reduce dystocia. However. one problem has been the inability to predict the actual birth weight of the calf at parturition.

Objectives

The objectives of this study were to:

1) Evaluate the relationship of pelvic area to calving difficulty in heifers.

2) Determine the effect of varying levels of percentage Salers breeding on dystocia.

3) Evaluate pelvic measurements in bulls and their association with other traits.

4) Conduct a stochastic computer simulation study to determine the effects of different selection strategies involving pelvic area and sire birth weight on the reduction of dystocia.

5) Evaluate the effects of different combinations of calf and dam heterosis on the incidence of dystocia.

LITERATURE REVIEW

Dystocia, defined as difficult or delayed birth, is the primary cause of post natal mortality in calves (Anderson and Bellows, 1967; Koger et al., 1967; Laster and Gregory, 1973; Smith et al., 1976). Resulting economic loss is not restricted to loss of the calf or decreased postnatal performance, each time a cow needs assistance calving there is an added cost of labor attributed to the calf.

A comprehensive study by Rahnefeld et al. (1990) reported four major consequences which can result from dystocia; calf mortality, cow mortality, diminished cow reproduction and decreased calf performance. Calf survival was lowest for those calves that required assistance at calving. An additional reduction in calf survival was observed for calves that required minimal assistance. Smith et al. (1976) reported calf death losses to be 3.7 times greater for calves that suffered dystocia. Anderson and Bellows (1967) found that 79% of the calves lost at birth were anatomically normal, but injuries from parturition were the main cause of death.

Cow death loss can also result from dystocia. Rahnefeld et al.(1990) analyzed 10 yr of cow mortality records and reported that 46.2% of the cows that died between 0 and 35 d post-partum had experienced dystocia. Of the 46.2%, approximately 38.5% of the cows had a difficult delivery. Foulley et al. (1976) reported that when calving assistance was given and the cow was lost the economic impact was great.

Dystocia can have a significant effect on subsequent female reproductive performance. Rahnefeld et al. (1990) showed the post-partum anestrus period increased as the level of difficulty increased. Laster (1973) showed a decrease of 14.4% of cows in estrus during the 45 d breeding season. When pooled over all ages the overall conception rate decreased by 15.9% from dystocia. Brinks et al. (1973) reported that heifers that experienced dystocia as 2 yr-olds weaned 11% fewer calves the first year and 14% less calves per cow exposed the second year when compared to herd mates that experienced no difficulty at parturition. Philipsson also (1976e) reported that heifers who endure calving stress have a lower rate of conception and required a greater number of inseminations per service period.

When dystocia appears imminent, obstetrical assistance can be administered in an attempt to reduce calf loss, maintain viable reproductive performance and reduce the overall economic impact of dystocia. Doornbos et al. (1984) analyzed the effect of early versus late obstetrical assistance at parturition and reported that more cows from the early assisted group were in estrus at the start of the breeding season. They concluded that prolonged labor as a result of dystocia had an inhibitory effect on post-partum reproductive performance.

The economic effect of dystocia was reflected in a study by Brinks et al. (1973). Three-year-old cows that suffered

dystocia as 2 yr-olds had calves that were born 13 d later and weighed 21 kg less at weaning when compared to contemporaries that had no difficulty at parturition.

Cause of Dystocia

As a result of the large effects of dystocia on herd performance and economic returns, the need exists to delineate the causes of dystocia. Past research has determined that dystocia can be partitioned into a calf effect, maternal effect and a calf by maternal interaction (Bellows et al., 1971 a,b; Laster, 1973; Nazzie et al., 1989).

A study by Bellows et al. (1971b) of 198 Angus and Hereford primiparous heifers was conducted at the U.S. Range Livestock Experiment Station in Miles City, Montana to evaluate the relationships associated with dystocia and factors attributed to the dam or calf. Calf factors analyzed were sex, birth weight and gestation length. Male calves required more assistance than female calves at parturition. Calf birth weight was significant for dystocia and ranked first in importance of the factors associated with the calf or dam. A review paper by Price and Wiltbank (1977) used calf birth weight to represent calf size and reported the correlation of calf birth weight and dystocia to be .44. In an analysis of calving records of 1889 Hereford and Angus cows by Laster et al. (1973), dystocia increased 2.3% ± .21% for each 1 kg increase in birth weight. Smith et al. (1976) reported a similar increase of 1.63% ± .20% in dystocia score of calves

sired by British and Continental breeds. Nevins et al. (1986) reported that dystocia score increased .05 units for each 1 kg increase in birth weight in a closed line of Hereford cattle.

Recent research by Naazie et al. (1989) involved the analysis of 547 2-yr-old heifers. The full model included dam pelvic measures, calf birth weight, sire birth weight and some relative measures of ratios of calf birth weight and dam weight at calving on dystocia. The full model accounted for 32.5% of the variation in dystocia. Calf birth weight was reported to be the most important variable and accounted for 17.8% of the variation in dystocia.

Rutter et al. (1983) evaluated 476 purebred Charolais heifers and reported a significant difference between male and female calves for dystocia. The difference between sexes was significant at both the first and second calvings. They reported that heifer calves were not a significant source of variation for dystocia at first parturition until calf weight reached 50 kg. At second parturition heifer calves failed to influence calving difficulty.

Burfening et al. (1978a) analyzed 5578 progeny records sired by 178 purebred Simmental bulls. Gestation length, when analyzed as a covariate, significantly affected calf birth weight and calving ease score. An increase of .70% assisted births was reported for each day increase in gestation length. When birth weight was included with gestation length as covariates, gestation length was no longer significant for

dystocia or percent assisted births. They concluded that the influence of gestation length was through its affect on birth weight. Bellows et al. (1971b) reported gestation length to have a positive effect on calf birth weight in Hereford and Angus dams. Lawlor, Jr. et al. (1984) analyzed performance data on 543 3-yr-old Angus, Hereford and Simmental crossbred calf groups and reported fifty percent Simmental calves had the longest gestation length. They also had the heaviest birth weight and had the most trouble calving. Price and Wiltbank (1978) found the correlation between gestation length and birth weight, from 21 different studies, to be .296. They reported that a relationship does exist between gestation length, sex of calf and calf birth weight. Male calves were 2.7 kg heavier at birth and required more assistance.

Breed of sire has been shown to have a significant effect on dystocia (Sagebiel et al., 1969; O'Mary et al., 1972; Singleton et al., 1973 and Lawlor, Jr. et al., 1984). The incidence of dystocia has been reported to be higher in Hereford and Angus cows when calves were sired by Charolais, Simmental, Limousin or South Devon bulls, as compared to Angus, Hereford or Jersey bulls (Laster et al., 1973). Bos indicus sired calves have been shown to be heavier at birth and have more difficulty at parturition. A higher rate of dystocia has been found to exist in crossbred heifer calves, versus straightbred heifer calves (Sagebiel, 1973).

Maternal Effects

Pelvic area of the dam is the most important maternal effect related to the incidence of dystocia (Bellows, 1971b; Deutscher, 1978; Johnson et al., 1988). Short et al. (1979) evaluated 592 crossbred 2-yr-old heifers for causes of dystocia. Dam pelvic area ranked second, behind calf birth weight, in the order of importance for calving difficulty. They attempted to overcome the two dimensional non-linear nature of pelvic area by analyzing the square root of pelvic area and the cubed root of birth weight but failed to account for additional variation in dystocia.

Price and Wiltbank (1978) reported that 69% of 2-yr-old Hereford heifers that had a pelvic area <200 cm^2 experienced dystocia, whereas heifers with a pelvic area between 200-229 and 230-269 cm^2 had dystocia rates of 30 and 25%, respectively. Belcher and Frahm (1979) analyzed data on 900 heifers and found that heifers who calved without assistance had 7.4 cm^2 greater pelvic area, as compared to heifers that required assistance at parturition. An Australian study by Axelson et al. (1981) showed that females experiencing dystocia had 14 cm^2 smaller pelvic area, when compared to heifers who calved unassisted. Breed differences have been shown to exist in the order of importance of pelvic area on dystocia.

Bellows et al. (1971b) reported pelvic area to rank first in the order of importance for maternal effects in Hereford females and second in Angus.

The role of independent pelvic dimensions has been studied to determine if pelvic height or pelvic width would account for more variation in dystocia. Philipsson (1976d) showed differences in pelvic area to be more a function of pelvic height than width. Rutter et al. (1983) recorded pelvic height in 476 purebred Charolais heifers and reported that it failed to account for any appreciable variation in dystocia. Yet, Laster et al. (1973) reported pelvic height to influence dystocia in Angus, Brahman, Devon, Hereford and Holstein sired calves, whereas pelvic width was shown to be significant for dystocia in Hereford and Angus cows fed three different levels of energy before calving. No reason was reported for the difference in importance of pelvic height in different breeds or the difference in importance of pelvic width on dystocia in cows fed different levels of energy. Naazie et al. (1989) reported that pelvic width provided as much information on calving difficulty as did pelvic area; thus, speculating that pelvic width is the limiting dimension. Johnson et al. (1988) reported the prebreeding residual correlation for pelvic height and pelvic width with dystocia in Hereford heifers to be -.10 and -.24, respectively.

Based on previous literature it is apparent that independent pelvic dimensions did affect calving difficulty, but the ability to use them to identify heifers that may have a predisposition for dystocia was low.

In an effort to increase total cow productivity and reduce the cost of raising replacements, it has become standard practice to calve primiparous heifers at 2 yr of age. However, in two-year-old primiparous heifers, skeletal development of the pelvis is incomplete and dystocia often occurs (Joandet et al., 1973; Burfening et al., 1978a; Philipsson, 1976d). Laster et al. (1973) analyzed calving data on Hereford and Angus cows. Variables in the analysis included age, sex, sire breed and dam breed. Dam age was the only significant main effect, when birth weight was included in the model. Price and Wiltbank (1978) reported the occurrence of dystocia to be 29.7% in 2-yr-old heifers, versus 10.5% and 7.2% in 3- and 4-yr-old cows, respectively. Rutter et al. (1983) reported a significant difference in dystocia between second and third parity females, with dystocia rates of 31.1% and 15% respectively. Kress et al., (1990a,b) analyzed 246 calf performance records from 2-yr-old straightbred and crossbred heifers and reported dystocia scores to range from 2.1 to 2.5 , whereas 706 3-,4- and 5-yr-old cows with various levels of Angus, Hereford and Simmental breeding had dystocia scores of 1.65, 1.23 and 1.26, respectively.

Nutrition

The effect of nutrition on dystocia has also been investigated for its possible role in the occurrence of dystocia. Corah et al. (1975) fed two groups of heifers a high and low ration for a 100-d prepartum period. High rations were equivalent to 100% of the NRC requirements for energy and low diets provided 65% of the NRC specifications for energy. Heifers on the high energy diet gained 36.1 kg over the feeding period whereas females fed the low energy ration lost 5.8 kg. The low heifers delivered calves with lower birth weights, but the incidence of dystocia was not different ($P>.10$) from the heifers fed a high level of energy. Arnett et al. (1971) found that obese heifers required more assistance at parturition. Philipsson (1976d) concluded that dystocia would befall heifers that are extremely fat or thin. Consequently, manipulation of prepartum rations by producers to reduce dystocia will not solve their dystocia problems.

Prediction of Dystocia

In order to reduce the economic loss attributed to dystocia, researchers have attempted to develop methods to aid in the prediction of dystocia. Price and Wiltbank (1978) used stepwise regression analyses to identify variables that could be used to predict dystocia. They determined calf size and dam pelvic area at breeding to be highly related to dystocia. They found the ratio of calf birth weight to calf body length and pelvic area at 35-d post breeding to account for 37% of the

variability of dystocia in Angus dams. In Charolais, these variables explained 44% of the variability in dystocia.

Morrison et al. (1985) used discriminant analyses to predict dystocia in Chianina crossbred cows mated to Chianina bulls. Variables analyzed for prediction were cow age, cow weight, pelvic width, pelvic height, pelvic area and calf size. Calving difficulty was categorized as either assisted or unassisted. The model correctly classified 57.1% of the cows and the error in prediction was in cows 3-yr of age and older. This precalving prediction model correctly predicted the classification of normal parturition or dystocia in all 2 yr old first calf heifers.

Discriminant analysis was used by Rutter et al. (1983) to predict dystocia in Charolais heifers. Variables pertaining to the heifer that were used to predict dystocia were calving score of the heifers dam, age of the heifer at conception, grade of the heifer at yearling age, pelvic height of the heifer at breeding and breed of sire of calf. To evaluate all effects a second model was derived which included calf birth weight and sex of calf. Results of the discriminant analyses showed yearling weight of the heifer and calving difficulty of the cows dam to be significant. When calf effects were included in the model, birth weight was found to be the most important variable.

Laster (1973) evaluated traits in 599 2-yr-old primiparous cows. Factors analyzed in relation to dystocia

were breed, precalving energy level, pelvic height, pelvic width, cow weight, calf sex, calf birth weight, calf shoulder width, hip width, chest depth, wither height and body length. Traits measured prior to calving accounted for 26% of the variation in the incidence of dystocia. He concluded that physical measurements in his study were inadequate as predictors of dystocia.

Genetic Parameters

The development and expression of traits in all species is determined by the genetic "framework" of that trait. Within each trait there is a certain amount of variation that is a function of the total genotypic and environmental effects. The additive genetic variance is a component of the total genetic variation and influences that aspect of genetic effect in regards to selection. Its proportion to the total phenotypic variance is what allows one to draw conclusions on the degree of resemblance between relatives and is referred to as heritability (h^2). It behooves one to be aware of the heritability estimates for characteristics because there are two ways producers can change genetic properties; choice of parents and management of mating system (Falconer, 1989).

Green et al. (1988) estimated the genetic parameters and breed differences associated with pelvic area on 787 females, representing Angus, Hereford, Red Angus and Simmental breeds. Heritability estimates, when age was the covariate, for pelvic height in heifers pooled over all breeds at San Juan Basin

Research Center (SJBRC) and Fort Collins (FC) were .83 and .82, respectively. When weight was the covariate h^2 estimates for pelvic height were .74 and .73 for SJBRC and FC, respectively. Contrasting h^2 estimates of .19 and 1.07, when age was in the model, were calculated for pelvic width at SJBRC and FC, respectively. A similar difference was observed when weight was the covariate, respective h^2 estimates of .09 and .49 were reported for SJBRC and FC. Heritability values for pelvic area were estimated to be .56 and .97 for SJBRC and FC, respectively, when age was the covariate. Similar values of h^2 were observed when weight was in the model with estimates of .47 and .55 for SJBRC and FC, respectively. They concluded that rapid change in pelvic measurements could be made through selection.

Benyshek and Little (1982) analyzed Simmental paternal half sibs (PHS) and reported heritability estimates which were in contrast to Green et al. (1988), with lower heritability values of .53, .43 and .58 for PA, PH and PW, respectively. Morrison et al. (1986) reported PHS h^2 values of .68, .59 and .82 for PA, PH and PW, respectively. Estimates of heritability in Hereford bulls for pelvic height were .47 and .23 at 403 and 490 d, respectively. Higher heritability estimates were calculated for pelvic width with values of .58 and .50, respectively (Nelson et al., 1986). Neville et al. (1978) estimated h^2 by using the double regression of daughter on dam method in heifers that were selected on the basis of a heavier

than average weight. He reported low heritability estimates that were more aligned with Benyshek and Little (1982) with values of .24, .22 and .38 for PA, PH and PW, respectively. Therefore, since PW or PH are of moderate to high heritability, the response in the change in PH or PW as a result of selection can be achieved with some degree of confidence.

Progressive beef cattle producers are able, to some degree, to control the choice of parents. This is achieved through selection of replacement heifers and more importantly through sire selection. Today's sire services have further broadened the sire potential by expanding the overall genetic base. A common approach to reducing dystocia is through the selection of sires from breeds known for their calving ease, or by selecting sires within the breed that possess desirable actual birth weights or appropriate EPD's.

Cundiff et al. (1986) investigated the between and within breed genetic parameters of calving ease traits and calf survival to weaning. He found the correlation among breeding values of individuals of the same breed were in excess of .5 for both birth weight and dystocia. The breed of sire variance was reported to be greater than the sire within breed variance. The total heritability and within breed heritability estimates suggest that gestation length and birth weight are under a high degree of direct genetic control and that dystocia is subjected to a moderate level of direct genetic

control. Overall, appraisal of heritability estimates suggest that selection to reduce birth weight or dystocia could be effective and would enhance calf survival. Bellows et al. (1982) suggested sires could be selected to sire calves that will have lower birth weight and dystocia, but have weaning weights that are equivalent to calves sired by bulls that produce high birth weight progeny that endure high rates of dystocia.

Due to the relatively high heritability of pelvic dimensions, the measurement of pelvic dimensions in bulls has become increasingly more common among seedstock producers. The notion exists that pelvic dimensions of bulls would be beneficial in a genetic selection index (Wilson, Personal communication, 1991). It has been postulated that selection of sires with large pelvic dimensions will result in female progeny with larger pelvic dimensions that are able to deliver calves with less assistance.

Siemens et al. (1989) analyzed test station bulls and found breed differences to exist for pelvic area. He reported that the exotic breeds of Chianina, Gelbvieh and Simmental to have a larger average pelvic area when compared to Hereford and Angus bulls. Cook et al. (1991) evaluated data on Angus, Hereford and Salers test station bulls and found that the exotic Salers had a significantly larger pelvic dimensions. However, not all exotics are superior for pelvic area. The Charolais breed studied by Siemens et al. (1989), which stood

taller at the hip, possessed pelvic dimensions that were smaller than the British breeds. This could be a result of the heavy, doubled muscle nature of Charolais because Vissac et al. (1973) found that females of heavy, double muscled breeds had smaller pelvic area.

In order to further optimize selection, a complete understanding of the relationships between traits is critical. Failure to understand the direct and indirect relationships among traits can result in genetic trends that fail to serve any economic or utilitarian benefit. In order to improve efficiency, reduce labor and amount of stress, it is important to elucidate the degree of association between easily obtainable traits (i.e., body weight) and other traits of interest that are not as easily obtained (i.e., internal pelvic dimensions).

One of the easiest obtainable measures of body size is live weight. Live weight has been shown to account for the largest amount of variation in pelvic area (Laster, 1973). In an effort to determine the relationship of internal pelvic dimensions and external body size, Bellows et al. (1971b) analyzed the association of precalving body size with pelvic area. Heavier heifers had greater hip width, rump length, pelvic height, pelvic width and pelvic area. When weight was held constant, hip width and rump length accounted for significant amounts of variation in pelvic area. He postulated that skeletal weight is a portion of body weight, and hip

width and rump length are measures of skeletal dimensions. Consequently, skeletal measures of hip width, rump length and the skeletal component of body weight would be expected to be associated with an increase in pelvic area. However, correlations by Deutscher and Zerfoss (1983) and Bolze (1985) for pelvic area with heifer weight were fairly low, with estimates between .22 to .34. They concluded that actual internal measurements should be taken because of the variation in pelvic area that exists between heifers of similar weight.

Each year producers "turn over" a portion of their bull power. This is done for a variety of reasons, one being to update the genetic input into the herd. Most bulls available for sale are fertility tested, which involves measuring the scrotum. Scrotal circumference is an easily obtained measurement that expresses moderate heritability (Knights et al., 1984; Kriese et al., 1991). As a result of the ease by which scrotal circumference is obtained, knowledge of its genetic relationships with other traits (i.e. pelvic dimensions) could prove beneficial.

Favorable relationships have been shown to exist between scrotal circumference with early growth measures and female reproductive traits (Brinks et al., 1978). Smith et al. (1989) obtained growth and reproductive data on 779 and 564 yearling heifers and bulls, respectively. He concluded that for each cm increase in scrotal circumference, birth weight decreased slightly. A favorable correlation of .14 existed with scrotal

circumference and age at puberty. Similar research by King et al. (1983) found a large favorable negative correlation (-1.07) to exist between age at first estrus and scrotal circumference. Results of these two studies allow one to conclude that selection for scrotal circumference can result in a positive change in the growth curve and an improvement in the reproductive state (i.e. earlier age at puberty) in females.

In one of the first comprehensive studies with scrotal circumference and pelvic measurements in bulls, Nelson et al. (1986) studied the genetic parameters for growth and reproductive performance in 427 Hereford bulls reared in eastern Montana. Their estimated genetic correlations suggest that selection for weight at 403 or 490 d should result in a positive, correlated response for scrotal circumference, pelvic width and pelvic area. Ironically, the anticipated result for pelvic height when selection was for weight was low.

Nelson et al. (1986) also calculated genetic correlations for birth weight and performance traits. He reported negative correlations of -.29 and -.13 between birth weight and pelvic area at 403 and 490 d, respectively. These low negative genetic correlations were attributed to the maternal effect of the dam. Calculated phenotypic correlations between scrotal circumference with pelvic measurements were low. This suggests that selection for scrotal circumference, an early growth

indicator, would not have a strong impact on pelvic dimensions.

MATERIALS AND METHODS

Experiment 1

Performance and anatomical data were collected on 806 bulls representing Angus, Hereford and Salers breeds. All bulls had completed the 1990 or 1991 Midland Bull Test at Columbus, Montana (Table 1). Data were gathered at the time of the breeding soundness examination (BSE) at the conclusion of the 140-d feeding trial.

An analysis of percentage Salers bulls was also performed. The .75 and .875 percentage Salers bulls were grouped together and labeled (.75). Purebred and fullblood groups were combined and labeled (FB). Fullbloods were classified as bulls that could trace their ancestry in its entirety to the French Salers Herdbook and consequently had 100% Salers breeding, whereas purebreds were bulls that had 93.75% or greater Salers breeding.

Table 1. Age and 365-day weight range for Angus, Hereford and Salers bulls for 1990 and 1991.

		Age in days		365-day weight (kg)	
Breed	No.	Mean	Range	Mean	Range
Angus	410	395	328-459	560.0	474-692
Hereford	167	400	348-455	539.3	466-650
Salers					
FB	109	381	330-423	578.1	505-667
.75	120	393	337-457	544.0	450-626

Bulls placed on test were selected by the individual consignors based on their independent selection criteria. All bulls were fed a high roughage diet and were maintained similarly while on test.

Bulls were grouped according to their biological type, but were partitioned into smaller feeding groups (n=40) based on evaluation by test station personnel.

Table 2. Age (AGE), Hip Height (HH) and 365-d weight (WT365) range for Angus, Hereford and Salers bulls for 1991.

		Age in days		365-day weight (kg)	
Breed	No.	Mean	Range	Mean	Range
Angus	235	395	331 to 449	555.0	475 to 643
Hereford	73	403	364 to 453	540.9	485 to 650
Salers					
FB	44	389	337 to 457	542.6	465 to 626
.75	32	376	330 to 417	572.6	505 to 655

		Hip Height (cm)	
Breed	No.	Mean	Range
Angus	202	132.5	113.3 to 146.0
Hereford	62	133.0	124.5 to 142.2
Salers			
FB	40	139.0	129.5 to 146.0
.75	31	138.2	130.8 to 147.3

Anatomical characteristics evaluated in 1990 were internal pelvic dimensions of pelvic height (PH), pelvic width (PW), pelvic area (PA; product of PH*PW) and scrotal circumference (SC). Additional data consisted of 365-d weight (WT365), age in days (AGE) and birth weight (BW). In 1991 hip height (HH) was measured (Table 2) at the conclusion of the feeding trial.

Internal pelvic measurements were obtained with a Rice pelvimeter[1] via rectal palpation. The pelvic measurements in 1990 were all taken by an experienced veterinarian, however 1991 measurements were obtained by two different experienced technicians utilizing the same points of reference. The PH was the linear distance (cm) between the sacral vertebrae and the pubic symphysis. The transverse measurement (PW) was the linear distance (cm) between the shafts of the ilium at the widest point. Scrotal circumference was the circumference at the widest part of the scrotum after the testis had been descended fully into the scrotum. The BW on each bull was taken by each individual consignor within a reasonable time following parturition. The AGE was calculated as age in days at the time of the BSE. Hip height was measured by descending a tape down from the top of the chute to the backbone, midway between the hooks (Doornbos et al., 1978).

Statistical Analysis.

Data on PA, PH, PW and SC were analyzed using least squares procedures (SAS, 1985). The full model included the effects of breed, linear and quadratic effects of age (or WT365) and the interactions of the linear and quadratic effects with breed. Year (YR) was included when 1990 and 1991 data were analyzed together. In 1991 technician effects along

---

[1] Lane Manufacturing, Denver, Colorado

with the linear and quadratic effects of the covariate HH were also evaluated. Covariates which were not significant (P>.10) were deleted and reduced models were fitted to the data. Log transformations of PA, HH and WT365 data were also performed to estimate relative growth coefficients. Percentage Salers data was evaluated in a similar fashion with percent Salers replacing breed in the model.

Residual correlations were calculated using the SAS (1985) procedure. Correlations were calculated after the effects of breed and age were removed.

Full Model

$$Y = u + a_i + c_j + b_L(X_{ijk}) + b_Q(X^2_{ijk}) + ab_{Li}(X_{ijk}) + ab_{Qi}(X^2_{ijk}) + e_{ijk}$$

Where:

Y	=	Observation of PA, PH, PW or SC
u	=	overall mean, when x = 0
a_i	=	effect of the ith breed (Angus, Hereford or Salers
c_j	=	effect of the jth year
X	=	Age, WT365 or HH
b_L	=	linear regression of y on x
b_Q	=	quadratic regression
ab_{Li}	=	interaction of a_i and b_L
ab_{Qi}	=	interaction of a_i and b_Q
e_{ijk}	=	random residual

Experiment 2

Pelvic measurements, 365-d weight and age were obtained on 317 heifers representing Angus, Hereford and Salers breeding. Data were collected from three registered Salers ranches and the Montana State University (MSU) research ranch (Table 3). The MSU herd is comprised of crossbred cows characterized by Hereford and Angus breeds involved in a two-breed rotation.

Table 3 Distribution of heifers by breeder and proportion Salers.

Breeder	.5	.75	.875	.9	FB	Other	Total
Jacobsen	5	59	39	26	1	0	130
M.S.U.						76	76
Nichols	5	41	5	3	1	0	55
Skinner	1	10	8	13	24	0	56
	11	110	52	42	26	76	317

Prebreeding data were collected at approximately 12 mo. of age. Pelvic measurements were collected by an experienced technician using the technique previously described in experiment 1 for yearling bulls. WT365 was acquired at the time of pelvic measurement.

Calf birth weight (BW) and dystocia scores (CDS) were collected at calving. Dystocia scores were assigned in two different ways.

The first method characterized the intensity of parturition and was classified as INTENSE; dystocia was scored on a scale of 1-5:

1 = No difficulty
2 = Slight assistance
3 = Hard pull, mechanical assistance required
4 = Caesarean section
5 = Abnormal presentation

The second method measured the incidence of dystocia by grouping scores 2 through 5. Hence, difficulty was scored 1 or 2 and was labeled DIFF. Pelvic shape was also analyzed and was estimated by the PW/ PH (WHRAT) ratio.

Additional pelvic, WT365, sire and dam data were obtained on 63 bulls from Skinner Ranch Salers. These records were pooled with the heifer data from Nichols Farms, Skinner Ranch Salers and Jacobsen Salers and were used to estimate genetic parameters for PA, PH, PW, WT365 and BW.

Statistical Analysis.

Data were analyzed using the General Linear Model program of SAS (1985). The full model analyzed INTENSE and DIFF as a dependent variable. Main effects included sex of calf, herd and sire of calf nested within herd. The covariates BW, PA, WHRAT and WT365 were also included in separate models which analyzed their effect on INTENSE and DIFF dystocia.

Differences between herds in PA, PH, PW, BW and WT365 were determined by evaluating the traits as dependent variables. The main effects from the original full model were retained as independent variables.

The effect of percentage Salers on dystocia was also evaluated. This was accomplished by removing the MSU heifers and analyzing the 241 Salers and Salers cross heifers as a separate data set. Percentage groups represented were .5, .75, .875, .9 and FB heifers. The distribution of each percentage group is presented in Table 3. The statistical model was the same as the model implemented in the original analyses of dystocia, however percentage Salers of the dam (PTDAM) was added as a covariate.

Heritability estimates were calculated by using Harveys Paternal Half Sib (PHS) model (LSMLW). The PHS estimates were determined by using a model that included the independent variables of herd, sire(herd), age of dam , percentage Salers and age (or WT365) as a covariate. Since bull data were only available from one herd, the bulls were considered to be a separate herd for statistical analysis.

Experiment 3

The use of pelvic measurements in heifer selection programs to reduce dystocia has increased in recent years. The economic value of selecting for increased pelvic area has become a controversial topic among animal scientists. Many researchers have concluded that selection for pelvic area will fail to reduce dystocia, and assume that the net result from pelvic area selection will be a genetic trend toward larger cows with heavier calves. Yet, some scientists have promoted pelvic area as a valuable tool that will appreciably reduce dystocia with little or no effect on calf birth weight. However, researchers are in agreement with the fact that calf birth weight is the most important attribute responsible for dystocia.

The advent of the "expected progeny difference" (EPD) for birth weight has given producers a tool that allows them to reduce the error in selecting a bull that has a birth weight that is compatible with the maturity and development of their females. If the accuracy of the EPD is low then the predictability will vary. Just how heavy of a birth weight primiparous heifers can handle with little or no dystocia is not well defined.

The use of crossbreeding systems has allowed producers to increase calf performance and boost cow efficiency. Maternal ability, reproduction, health and cow longevity are all traits that benefit from high levels of heterosis (10-30%); while

growth rate and milk production can benefit from medium levels of heterosis (5-10%). Producers that sustain a crossbreeding program also profit from the additive effects of individual and maternal heterosis (Kress and Nelson, 1988). However, the effects of different levels of calf and dam heterosis can result in an increase in dystocia; thus, possibly diminishing the returns from crossbreeding.

As a result of the complex nature of dystocia, an evaluation of the effects of selection for heifer pelvic area when mated to bulls with different EPD's for birth weight is needed. A stochastic computer simulation model was developed to: 1) evaluate various heifer and sire selection strategies and the ensuing effects on the incidence and severity of dystocia; 2) evaluate the effect of calf and dam heterosis on heifer pelvic area and dystocia.

The model was written in FORTRAN 77 and run on a microcomputer. A complete listing of the program is presented in Appendix B, Figure 11. The program simulated direct selection for pelvic area by retaining heifers based on yearling pelvic area (YRLGPA). Heifers retained for breeding were mated to bulls with different EPD's for BW representing low BW and growthy, high BW bulls. This range reflects bulls that represent the diverse types of breeds that are available for easy calving (ex: Longhorn) or growthy calves (ex: Chianina), as well as the variation of bulls within breeds.

Sire EPD's (SEPD) were assumed to be of high accuracy and representative of sires available by A.I. sire services.

The simulation procedure utilized genotypic and phenotypic parameter estimates taken from the literature. Traits included YRLGPA, calving pelvic area (CLVGPA), BW, sex (SEX), ratio of CLVGPA/BW (RATIO), the incidence of dystocia (DIFF) and calving difficulty score (CDS). SEX was based on a 50:50 ratio of bulls:heifers and was stochastically determined. DIFF was a discrete response variable that was determined stochastically by the probability of RATIO. A value of 1 indicated dystocia with 0 representing no dystocia. CDS was deterministically determined according to RATIO and was on a numerical scale from 1 to 5; CDS was categorized according to the guidelines previously described in experiment 2. Both CDS and DIFF procedures utilized RATIO, these procedures were according to Short et al. (1979).

Figure 1 illustrates the biometrical relationships for the traits simulated. Parameter estimates listed in Table 4 were derived from the literature. The foundation for the simulations were the generations of YRLGPA and BW phenotypes. When females were pregnant then phenotypes for CLVGPA and BW were simulated.

The genetic correlation between the maternal BW portion of the BW breeding value (BV) with the BV for YRLGPA and CLVGPA was assumed to be zero. Genetic and environmental correlations between YRLGPA and CLVGPA were chosen to be

consistent with the r_p of .70 between YRLGPA and CLVGPA (Johnson et al., 1988). Genetic parameters for BW-direct and BW-maternal were averages of literature estimates (Brown and Galvez, 1969; Koch, 1972; Wilson et al., 1986; Bertland and Benyshek, 1987; Cantet et al., 1988; Garrick et al., 1988 and Kriese et al., 1991).

Decisions pertaining to heifer selection are some of the most important judgements made by producers. The percentage of heifers retained should be suitable to replace those cows being culled and be sufficient to compensate for the fact that not all heifers will conceive. Thus, the decision process in this simulation reflected decisions made at the farm level for a set of heifers.

The program automatically adjusted the number of females available for mating to meet the demand of replacing 60 heifers each year under different levels of retention. Five replications (REP) of the simulation were performed, this would simulate the effects of a five year selection program. The percentage of heifers retained varied between the top 40% to 100%, thus, the total herd size that the heifers were derived from differed between different selection strategies. For example, if the simulation modeled retaining the top 40% of the heifers based on YRLGPA pelvic area then an original female base of 150 would be used to select the 60 heifers; if 100% of the heifers were kept then the population selected from was 60. Because the probability of conception for each

heifer was .85, the total number of heifers that actually calved in each selection scenario varied randomly between groups.

Heifer retention remained static over each REP (i.e. 60). This allowed for evaluation of long-term selection for PA. Four different selection strategies utilizing heifer YRLGPA were analyzed. The percentage of heifers retained for breeding (PBRD) involved the top 100% (P100), 80% (P80), 60% (P60) or 40% (P40) for YRLGPA. Selection of P100 evaluates the effects of random selection for PA. Each PBRD category of heifers was mated to each level of the sires representing the six SEPD categories. The birth weight EPD's represented were -2.7, -1.8, -.9, 0, .9 and 1.8 kg. Thus, a total of 24 different mating combinations were simulated for their effect on dystocia.

For the heterosis analyses, four levels of calf and three levels of dam heterosis were chosen to reflect common occurring levels of maternal and individual heterosis. The four levels of calf heterosis (FC) consisted of 0, 50, 67 and 100%. Calves with 0% heterosis would be representative of calves that are straightbred, calves with 50% heterosis are the result of a backcross mating system. Calves with 67% individual heterosis would represent a two-breed rotation breeding program at equilibrium, calves with 100% individual heterosis are indicative of calves that result from the mating of a sire breed to straightbred cows of a different breed.

Simulated maternal heterosis was indicative of three common categories of dam heterosis (FD), which were 0, 67 and 100%. Maternal heterosis results in a similar manner as the individual heterosis for calves. Dams with 0% heterosis are straightbred, while cows with 67% are the result of a two-breed rotation mating system. Females with 100% maternal heterosis are the result of the first cross (F_1) between two different breeds.

The different levels of FC and FD resulted in 6 distinct treatments. The treatments were FC=0, FD=0 (TRT=1); FC=100, FD=0 (TRT=2); FC=100, FD=100 (TRT=3); FC=50, FD=100 (TRT=4); FC=100, FD=67 (TRT=5) and FC=67, FD=67 (TRT=6).

Table 4. Genetic and phenotypic parameter estimates.

Trait	YPA	CPA	BW-D	BW-M
YPA	.60[a]	.80[c]	.75[b]	0
CPA	.55	.60[a]	.75	0
BW-D	N\A	N\A	.45	-.20
BW-M	N\A	N\A	0	.10

Where YPA=Yearling pelvic area, CPA= calving pelvic area
h^2= Diagonal
r_e= Below diagonal
r_G= Above diagonal
[a] Johnson et al., 1988
[b] Benyshek and Little., 1982
[c] Based on r_p of .70 from Johnson et al., 1988
See text for explanation.

Figure 1. Biometrical relationships among traits simulated.

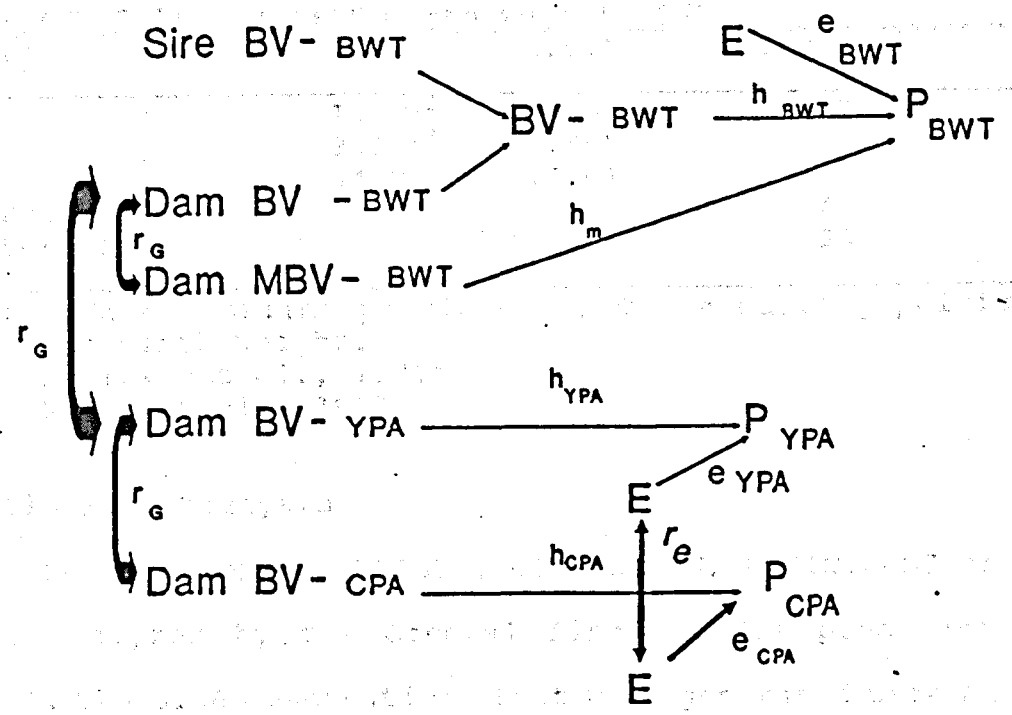

Where:

BV = Breeding value
BWT = Birth weight
CPA = Calving pelvic area
E = Environment
e_{BWT} = Environmental effect on the phenotype of calf birth weight.
e_{CPA} = Environmental effect on the phenotype of calving pelvic area.
e_{YPA} = Environmental effect on the phenotype of yearling pelvic area.
h_{BWT} = Genetic contribution towards the phenotype of calf birth weight.
h_{CPA} = Genetic portion of calving pelvic area from the dam.
h_m = Maternal effect on the phenotype of calf birth weight.
h_{YPA} = Genetic contribution of yearling pelvic area from the dam
P_{BWT} = Phenotype of calf birth weight.
P_{CPA} = Phenotype of calving pelvic area.
P_{YPA} = Phenotype of yearling pelvic area.
MBV = Maternal breeding value
r_e = Environmental correlation
r_G = Genetic correlation

Table 5. Means, coefficients of variation and heterosis estimates for yearling pelvic area (YRLGPA), calving pelvic area (CLVGPA) and calf birth weight (BW).

Trait	Mean[a]	C.V.[a]	Heterosis[b]
YPA	150cm^2	7.50%	2%
CPA	250cm^2	7.50%	2%
BW	34.0 kg	12.0%	
Direct			4%
Maternal			2%

Where YPA = yearling pelvic area; CPA = calving pelvic area and BW = birth weight.
[a] Bellows et al., 1971a
[b] Kress et al., 1988

Statistical Analysis

Observations of YRLGPA, CLVGPA, BW, RATIO, CDS and DIFF were analyzed by the General Linear Model procedure (SAS, 1985). The 6106 observations that were generated were analyzed with the full model that included the effects of PBRD, SEPD, SEX, the interaction of PBRDxSEPD and REP(PBRDxSEPD). Mean squares for REP(PBRDxSEPD) were used to test main effects because the experimental unit was REP.

The data were also analyzed using response surface techniques. Because the experimental unit was REP(PBRDxSEPD), means for each trait were computed by REP. The REP means were analyzed using weighted least squares procedures (SAS, 1985). The full model included the effects of PBRD, SEPD, PBRD^2, SEPD^2 and the interaction of PBRDxSEPD. Variables that were not significant were deleted and reduced models were fit to the data.

Calf and dam traits with different levels of heterosis were evaluated similarly to the heifer/sire selection analysis. The primary procedure analyzed the 1532 individual observations as traits of the calf and the dam. The full model for calf traits consisted of SEX, TRT and REP(TRT). The full model for dam traits consisted of TRT and REP(TRT). In both analyses REP(TRT) was used to test main effects.

The frequency of CDS and DIFF in the different selection strategies and heterosis analysis was determined by Chi-square (SAS, 1985) using data from the weighted means procedure. Since the data was continuous, CDS was altered and partitioned into three categories.

Where:

CDS $0 \leq 1.5 = 1$

CDS $1.5 \leq 2.5 = 2$

CDS $2.5 \leq 5.0 = 3$

It should be noted that the simulation did not generate any CDS greater than 3.8. For the heterosis study, CDS and DIFF frequency was analyzed within the 6 TRT combinations of heterosis.

RESULTS

Experiment 1

Means and ranges for age and 365-day weight of the bulls used in this study are presented in Tables 1 and 2. See Appendix A, Table 36 for the means and ranges for 1990. In the pooled data set all breeds were similar in AGE. A wide range in WT365 did exist, 539.3 to 578 kg, with FB Salers being the heaviest set of bulls.

When AGE was used as a covariate, no differences ($P>.10$) existed between technicians for the traits studied in 1991. As a result the 1990 and 1991 data were pooled. Table 6 shows the F-statistics from the analyses of variance of the pooled data set. Differences were found to exist between years for PW ($P<.05$), PH and SC ($P<.01$). Despite the significant YR effect for the independent pelvic dimensions, no difference ($P>.10$) between years was observed for PA.

Significant differences ($P<.01$) did exist between breeds for PA. Salers exhibited the largest PA ($P<.01$) followed by Angus and Hereford (Table 7). This is supported by Green et al. (1988), who reported breed differences to exist in females. Angus and Brangus had the largest PA, while Hereford females had the smallest.

Table 6. F-statistics from the analyses for pelvic measurements and scrotal circumference in test station bulls for 1990-91.

Trait	Breed	Age[a] (WT365)	Age^2 (WT365^2)	Age x Breed (WT365 x Breed)	Age^2 x Breed (WT365^2 x Breed)	Year
PA	49.03**	121.60**	-	-	-	.12
(cm^2)	22.71**	83.97**	-	-	-	.96
PH	2.69†	1.68	.99	2.64†	2.61†	6.76**
(cm)	33.53**	31.86**	-	-	-	9.36**
PW	12.03**	79.60**	-	-	-	4.21*
(cm)	6.48**	68.63**	-	-	-	2.05
SC	72.12**	61.32**	-	-	-	8.62**
(cm)	76.75**	55.45**	-	-	-	5.64*

[a] First row per trait represents F-statistic when age was the covariate. Second row represents F-statistic when WT365 was the covariate.

** P<.01

* P<.05

† P<.10

Table 7. Partial regression coefficients and least squares means for Angus, Hereford and Salers yearling bulls for 1990-91.

Trait	Breed	At constant age			At constant WT365	
		LSM[a]	Linear[b]	Quad[c] x10^{-3}	LSM[a]	Linear[b]
PA	Angus	164.4±.61			164.1±.62	
$(cm)^2$	Hereford	160.4±.95	.198±.02[d]	-	163.4±.98	.106±.011[d]
	Salers	172.3±.83			170.6±.83	
PH	Angus	14.39±.034	-.040	.061	14.38±.035	
(cm)	Hereford	14.04±.054	.108	.121	14.17±.055	.0035±.0006[d]
	Salers	14.78±.048	.039	-.042	14.74±.046	
PW	Angus	11.41±.028			11.40±.028	
(cm)	Hereford	11.40±.044	.008±008[d]	-	11.52±.045	.0044±.0004[d]
	Salers	11.64±.038			11.57±.038	
SC	Angus	36.32±.104			36.28±.105	
(cm)	Hereford	34.85±.163	.024±.003[d]	-	35.25±.166	.013±.002[d]
	Salers	34.31±.141			34.09±.141	

[a] Least square mean ± standard error

[b,c] Partial regression coefficient ± standard error

[d] Partial regression coefficient ± standard error for all breeds combined

There was no change in the ranking of the BREED least squares means for PW and PH from year to year. Siemens et al. (1989) reported that pelvic size in the exotic breeds of Gelbvieh, Simmental and Chianina were larger then Hereford and Angus. Steffan et al. (1985) studied Hereford, 50% Hereford-50% Angus, 25% Simmental-75% Hereford and 50% Simmental-50% Hereford heifers and reported that hip height and pelvic area increased as the amount of Simmental breeding increased.

A difference ($P<.05$) also existed between breeds for SC. However, the ranking in SC was reversed from the ranking of the pelvic dimensions. Angus had the largest SC and Salers the smallest ($P<.05$). This could be attributed to the fact that SC is a measure of the rate of maturity, and Angus and Hereford are generally earlier maturing, when compared to Salers.

When data were pooled over 1990 and 1991, the linear and quadratic interactions of AGE with BREED were significant ($P<.10$) only for PH (Table 6). Similarly, these interactions were significant for PH in 1990 ($P<.05$; Table 8). However, in 1991 none of the interactions were significant ($P>.10$). Thus, the breeds were similar in rate of PH increase.

Within year, the quadratic effects of AGE were significant for SC ($P<.10$) in 1990, but not in the pooled data set or the 1991 data. The linear effect of age was significant for PA and PW. The pooled linear regression of PA on age was .198 cm^2/ day.

This is slightly lower than the .32 and .20 reported by Siemens et al. (1991) for Polled Hereford and Angus bulls, respectively, of similar age.

F-statistics from the analyses of variance when pelvic dimensions were regressed on WT365 are presented in Table 6. No differences (P>.10) between technicians were observed so the data were pooled over 1990 and 1991. Differences between YR were present for PH (P<.01) and SC (P<.05). In contrast to results adjusted for AGE, no YR effect was observed for PW. The WT365 model was similar to the AGE model in that no YR differences (P>.10) existed for PA. Pooled least squares means presented in Table 7 illustrate a difference (P<.05) between breeds for PA. Salers exhibited a larger PA followed by Angus and Hereford.

With regard to LSM for PW and PH there was no difference (P>.10) in breed rankings between YR. Salers were superior for PW and PH followed by Angus and Hereford. Like the age model, there was a change in breed ranking for LSM for SC. Angus possessed a greater testicular circumference followed by Hereford and Salers. The differences between breeds for SC could be attributed to the fact that Salers is a later maturing exotic breed and SC is a measure of maturity.

In the combined years data set the linear effect of WT365 was significant (P<.05) for PA, PW and SC. The linear regression of PA on WT365 was .100 cm^2/ kg. This is lower than the .15 cm^2/ kg and .22 cm^2/ kg for Angus and Hereford,

respectively, reported by Siemens et al. (1991). This suggests that the growth for these traits is linear through this range in weight. The biological relevance is that skeletal and testicular growth has not yet decreased, thus the animal has not yet reached maturity for these traits.

Additional analysis with the quadratic WT365 revealed a significant within year effect. In 1990 the quadratic WT365 was significant for PW and SC ($P<.05$; Table 8). This could be a result that some observations were outliers in the data set. Therefore, in an attempt for the model to fit the data a curvilinear response was observed.

In 1991 the covariate HH was included in the analyses. Table 2 revealed that Salers had the largest ($P<.01$) HH followed by Hereford and Angus. It has been documented that exotic bred bulls have a larger skeletal structure when compared to British breeds (Steffan et al., 1985).

F-statistics from the analyses of variance with HH are presented in Table 9. The full model found the two interactions of HHxBREED and HH^2xBREED to be significant for PA and PH. Thus, the rate and growth curve by which PA and PH develop, when regressed on HH, is different ($P<.01$) between breeds.

Table 8. F-statistics from the analyses for pelvic measurements and scrotal circumference in test station bulls.

Trait	BC	Age[a] (WT365)	Age[2] ($WT365^2$)	[illegible]
Pelvic area	39.22**	65.00**	-	-
(cm^2)	22.11**	41.76**	-	-

Table 8. F-statistics from the analyses for pelvic measurements and scrotal circumference in test station bulls.

Trait	BC	Age[a] (WT365)	Age^2 (WT365^2)	Age x BC (WT365 x BC)	Age^2 x Breed (WT365^2 x BC)
Pelvic area	39.22**	65.00**	-	-	-
(cm^2)	22.11**	41.76**	-	-	-
Pelvic height	3.74*	.46	.22	3.76*	3.79*
(cm)	25.97**	15.04**	-	-	-
Pelvic width	13.13**	45.38**	-	-	-
(cm)	8.60**	4.28*	5.64*	-	-
Scrotal circ.	53.55**	3.73†	3.06†	-	-
(cm)	55.40**	5.80*	4.71*	-	-

BC=Breed, Age^2=AGE*AGE, WT365^2=WT365*wt365

[a] First row per trait represents F-statistic when age was the covariate. Second row represents F-statistic when WT365 was the covariate.

** P<.01

* P<.05

† P<.10

Figure 2 suggests that PA growth relative to long bone growth was accelerated in the Angus and Hereford, and was decreasing in the Salers. However, Angus, Hereford and Salers had relative growth coefficients of 1.43, 1.48, 1.70, respectively. Since all relative growth coefficients were greater than one indicates that PA development was proceeding at a more rapid pace, when compared to HH, in all three breeds. This suggests that the different shaped curves in Figure 2 for each breed could be attributed to sampling.

Least square means presented in Table 10 indicate that breed effects did exist for PA when adjusted for HH. Contrary to previous analysis with AGE and WT365, Salers had the smallest adjusted PA ($P<.01$) while Angus had the largest PA. Though Angus had a larger adjusted PA than Herefords, this difference was not significant ($P>.10$). However, because the relative growth coefficients between breeds were similar the difference in PA may be more of a statistical, than biological effect. When PA was adjusted to a common AGE and HH the Hereford and Salers had similar PA of 162.4 and 162.9 cm^2, respectively. Only Angus had a significantly larger ($P<.01$) pelvic opening of 167.8 cm^2.

In regard to other traits, the linear effect of HH did affect PW and SC ($P<.01$). Since the interaction of HHxBREED was non-significant ($P>.10$) for PW and SC, the rate of .065 and .112 cm per cm HH growth at which PW and SC develop is not different between breeds.

Table 9. F-statistics from the analyses for pelvic measurements and scrotal circumference in test station bulls for 1991.

Trait	BC	Age[a] (Hip) (WT365)	Age^2 (hip^2) (WT365^2)	Age x BC (Hip x BC) (WT365 x BC)	Age^2 x BC (Hip^2 x BC) (WT365^2 x BC)
PA	11.11**	53.89**	-	-	-
(cm^2)	5.74**	.11	0.00	5.87**	6.01**
	2.97†	42.52**	-	-	-
PH	16.71**	28.91**	-	-	-
(cm)	6.66**	.58	.30	6.82**	6.99**
	8.46**	16.17**	-	-	-
PW	1.19	32.87**	-	-	-
(cm)	10.89**	82.22**	-	-	-
	.48	33.98**	-	-	-
SC	26.04**	42.75**	-	-	-
(cm)	30.42**	12.57**	-	-	-
	25.58**	35.49**	-	-	-

BC=Breed, AGE^2=AGE*AGE, $WT365^2$=WT365*WT365, HH^2=HH*HH

[a] First row per trait represents F-statistic when age was the covariate. Second row represents F-statistic when hip was the covariate. Third row represents F-statistic when WT365 was the covariate.

** P<.01
* P<.05
† P<.10

Table 10. Partial regression coefficients and least squares means for Angus, Hereford and Salers yearling bulls for 1991.

Trait	BC	At constant age			At constant Hip		
		LSM[a]	Linear[b]	Quad[c]	LSM[a]	Linear[b]	Quad[c]
PA	Angus	164.9±.79	-	-	168.4± .78	-20.19	.082
$(cm)^2$	Hereford	161.3±1.44	.191±.02[d]	-	165.8±1.46	-11.79	.052
	Salers	170.8±1.42	-	-	157.1±2.41	40.6	-.141
PH	Angus	14.45±.044	-	-	14.59±.046	-.873	.0035
(cm)	Hereford	14.19±.081	.008±.001[d]	-	14.39±.087	-.969	.0039
	Salers	14.85±.080	-	-	14.20±.144	3.031	-.011
PW	Angus	11.41±.037	-	-	11.52±.038		
(cm)	Hereford	11.36±.067	.007±.001[d]	-	11.50±.067	.065±.007[d]	
	Salers	11.50±.066	-	-	11.12±.071		
SC	Angus	36.07±.146	-	-	36.31±.17		
(cm)	Hereford	34.33±.265	.031±.005[d]	-	34.69±.29	.112±.031[d]	
	Salers	34.43±.261	-	-	33.62±.16		

[a] Least square mean ± standard error
[b,c] Partial regression coefficient
[d] Partial regression coefficient ± standard error for all breeds combined

Figure 2. Regression curves for pelvic area (PA) on hip height (HH) in Angus, Hereford and Salers yearling bulls in 1991.

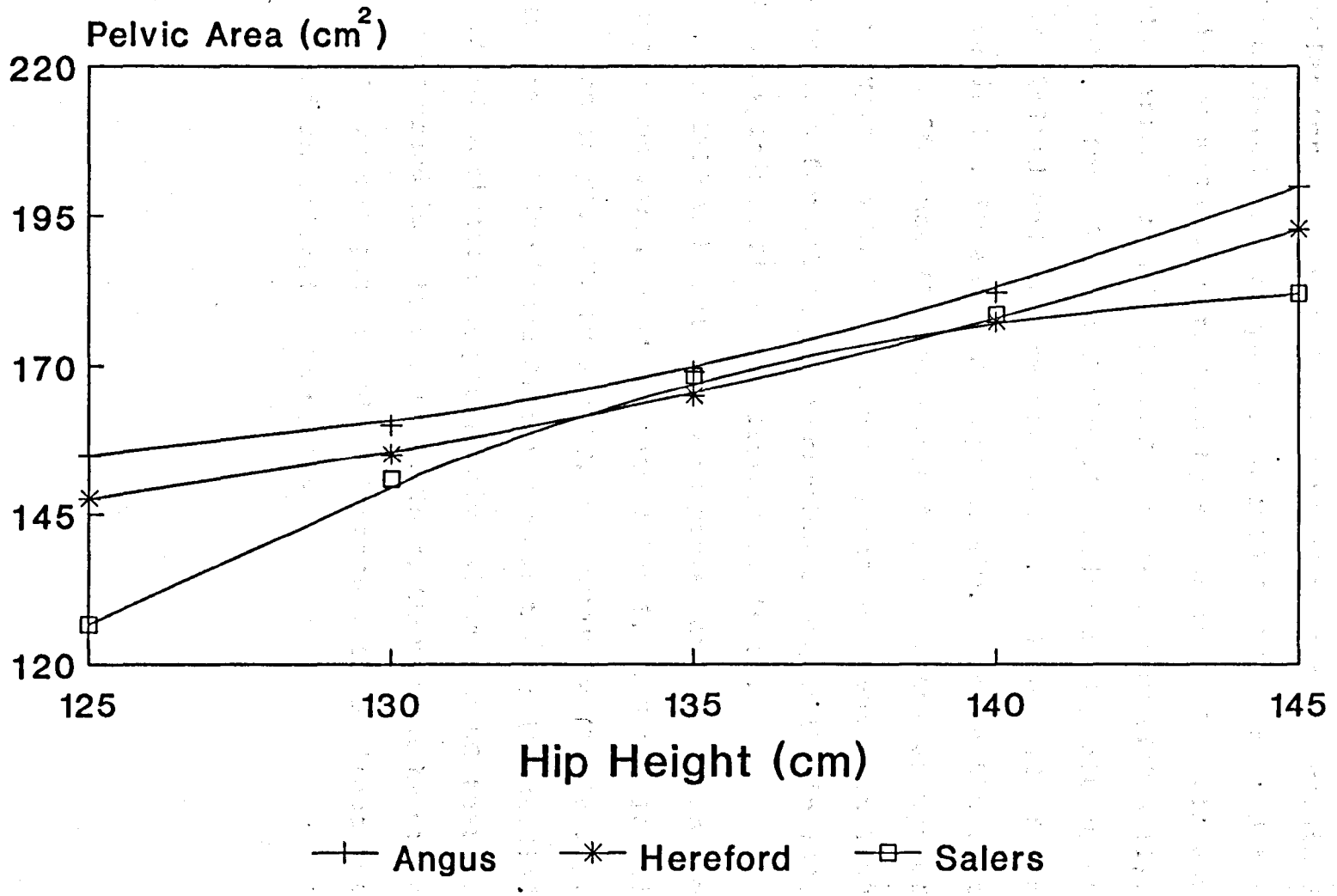

Variation

Though the LSM for the respective traits in each breed were similar for each year, the amount of variation explained by BREED differed between years. In 1990 BREED accounted for substantial amounts of variation by explaining .04, .13 and .21 of the variance in PW, PH and SC, respectively (Table 11). The R^2 values for 1991 in Table 12 indicate the effect of BREED was limited and only explained .00, .05 and .12 of the difference in PW, PH and SC, respectively. Despite the fact that no YR difference (P>.10) existed for PA, the amount of variation explained by BREED did vary between years. In 1990 BREED accounted for 11% of the variation in PA, while in 1991 BREED only explained 2% of the difference in PA.

When the 1990 and 1991 data were pooled and BREED was the only independent variable it accounted for 6, 2, 9 and 16% of the variation in PA, PW, PH and SC, respectively (Table 13). In conclusion, despite breed differences in the traits studied the amount of variation in pelvic dimensions and SC that is explained by breed is only moderate. Thus, there must be other factors, such as management and environment, that affect the expression of an individual's traits.

Table 11. Proportion of variance accounted for by various models for 1990.

	PA	PW	PH	SC
BC	.11	.04	.13	.21
BC WT365[a]	.19	.11	.16	.25
BC WT365 WT365^{2}[,b]	.19	.12	.16	.26
BC A[c]	.23	.13	.19	.25
BC A A^{2}[,d]	.23	.13	.19	.25
BC A BC*A BC*A^{2} A^{2}[,e]	.24	.14	.21	.25

Where A = AGE, WT365 = 365-d weight
[a] Significant for PA and PH at P<.01
[b] Significant for PW and SC at P<.05
[c] Significant for PA, PW and SC at P<.01
[d] Significant for SC at P<.10
[e] Significant for PH at P<.05

Table 12. Percent increase in variation for PA, PW, PH and SC for 1991.

	PA	PW	PH	SC
BC	.02	.00	.05	.12
BC WT365[a]	.12	.08	.09	.20
BC A[a]	.14	.08	.12	.21
BC*HH[b]	.35	.20	.25	.16
BC HH HH^{2} BC*HH BC*HH^{2}[,c]	.40	.29	.22	.16

Where A = AGE, WT365 = 365-d weight and HH = Hip Height
[a] Significant for PA, PW, PH and SC at P<.01
[b] Significant for PW and SC at P<.01
[c] Significant for PA and PH at P<.01

Table 13. Percent increase in variation for PA, PW, PH and SC for 1990 and 1991.

	PA	PW	PH	SC
BC YR	.06	.02	.09	.16
BC WT365 YR[a]	.15	.13	.10	.21
BC A YR[b]	.19	.11	.16	.22
BC A A^2 BC*A BC*A^2 YR[c]	.19	.11	.17	.22

Where A = AGE, BC= BREED AND WT365 = 365-D WEIGHT
[a] Significant for PA, PW, PH and SC at P<.01
[b] Significant for PA, PW and SC at P<.10
[c] Significant for PH at P<.10

The addition of AGE as a covariate resulted in an increase in the R^2 values for each trait. AGE accounted for 12% of the variation in PA in all analyses. The addition of any quadratic or interaction effects failed to account for any additional variation. These results support the F-statistics from the analyses of variance that suggest pelvic growth is linear over this range in age for yearling bulls.

Although the quadratic effect of AGE was significant in 1990 for SC (P<.10) it failed to explain any additional variation. Both the linear and quadratic effects of AGE explained an additional 4% of the difference in SC over breed. In 1991 the addition of the linear effect of AGE also resulted in a 4% increase in the R^2 value for SC. When the data were pooled the linear effect increased the R^2 value 6%. Thus, the effect of YR explained an additional 2% of the difference in SC. Kriese et al. (1991) analyzed SC data with a model that included yearling contemporary group, age of dam and sire as

main effects with AGE as the covariate. They reported that the the full model accounted for .6 and .5 of the variation in SC, with linear age of calf accounting for most of the variation.

Similar trends were found when WT365 was included as a covariate. In 1990 and 1991 the addition of the linear covariate WT365 to the model explained an additional 8 and 10% of the difference in PA, respectively. Though the quadratic WT365 was significant for PW in 1990 it only accounted for an additional 1% of the variation when compared to the linear effect, which explained an additional 7% over breed. Similar R^2 values were reported in 1991 and in the pooled data set. In 1991 the linear effect of WT365 accounted for an additional 8% of the variation in PW, whereas in the pooled data set the linear effect of WT365 explained an extra 11% of the difference in PW. Even though Siemens et al. (1987) reported pelvic growth to be non-linear for PW it appears from the R^2 values that the linear effect is equally effective for explaining the variation in PW. The quadratic effect for PW in 1990, though significant, may reflect a sampling error.

The pelvic trait that had the least amount of variation explained by WT365, regardless of the data set, was PH. The most that WT365 added to the variation was in 1991 when it explained an additional 4% of the difference. However, unlike PA and PW, most of the variation in PH was explained by BREED.

This infers that biological type has a greater influence then WT365 on PH development.

The quadratic was only significant for SC in 1990. The linear effect of WT365 accounted for an additional 4% of the variation in SC and the addition of the quadratic WT365 failed to explain any additional, substantial variation. In 1991 and in the pooled data set the linear effect accounted for an additional 8 and 5%, respectively, of the difference in SC.

The addition of HH to the model in 1991 explained the most variation in pelvic measurements, as compared to AGE or WT365. The linear effect of HH accounted for most of the variation and increased the R^2 value 33% and 20% for PA and PH, respectively, over breed alone. Though the full model involving HH was significant ($P<.01$) for PA and PH, it only explained an additional 5% and 1% for PA and PH, respectively. With regard to PW, the linear effect of HH explained 20% of the variation, this is much more than was explained by AGE or WT365.

The only trait which failed to have substantial sources of variation explained by HH was SC. The linear effect of HH only explained an extra 4% of the difference in SC. This could be due to the fact that SC is a reproductive trait that is representative of early maturing cattle. Since larger framed bulls take longer to mature they wouldn't be expected to have substantial SC development, when compared to early maturing bulls.

Though HH accounted for more of the variation in PA than AGE or WT365, it is not readily collected by producers. However, WT365 and AGE is readily available to most producers, and since the amount of variation accounted for by AGE and WT365 was similar the following equations can be used by producers to adjust PA.

Adjusting for AGE:

Adj. PA = (365 days - Actual age in days) * .198 + Actual PA

Adjusting for 365-d weight:

Adj. PA = (Adjusted 365 day wt - actual 365 day weight) * .100 cm^2/ kg + Actual PA

Phenotypic correlations were calculated among PA, PH, PW, SC, WT365, BW and HH (Table 14). All correlations were significant ($p<.05$) in the pooled 1990 and 1991 data set. Similar results were reported in the literature (Benyshek et al., 1982; Green et al., 1988). A difference existed ($P<.05$) between years for phenotypic correlations involving BW. In 1990, all correlations involving BW were low and non-significant ($P>.10$; Table 15). The low correlation of .03 between WT365 and BW is in contrast to the moderate correlation of .43 reported by Knights et al. (1984). This was possibly due to the fact that BW was taken at individual ranches, hence bulls were not contemporaries for this measurement. It is also possible that BW may have been part of the criteria used to determine which bulls were placed on test.

Pooled correlation estimates of PA with PH and PW were .76 and .79, respectively. Conversely, the relationship between PH and PW was low (.21). These estimates are similar to those reported by Morrison et al. (1986) who reported a strong phenotypic correlation of .79 and .79 for PH and PW with PA. They also reported a low correlation of .26 between PH and PW. Johnson et al. (1988) reported residual correlation estimates on data collected at pre-calving. They reported a lower estimate of .12 between PH and PW. Again, high values of .79 and .70 were calculated between PH and PW with PA, respectively. The consistent high estimate of PH and PW with PA is understandable because PA is a function of PH and PW.

In 1991 the strongest relationship that didn't exclusively involve pelvic measurements was between HH and PA. The phenotypic correlation of .59 is attributed to the fact that HH and PA are both measures of the skeletal structure. This is lower than the phenotypic correlation of .82 reported by Comerford et al. (1988). As a result, this implies that larger framed cattle would inherently have larger PA. Thus, a certain level of accuracy can be expected in identifying animals with superior PA by selection on HH. However, since the correlation isn't 1.0 pelvic measurements should be obtained when evaluating potential sires that are comparable in size.

Table 14. Residual phenotypic correlations for performance traits and anatomical characteristics for 1990 and 1991.

Trait	PA	PH	PW	SC	WT365
PH	.76*				
PW	.79*	.21*			
SC	.22*	.14*	.20*		
WT365	.31*	.19*	.29*	.26*	
BW	.15*	.12*	.11*	.10*	.20*

* P < .05

Table 15. Residual phenotypic correlations for performance traits and anatomical characteristics for 1990.

Trait	PA	PH	PW	SC	WT365
PH	.77*				
PW	.80*	.22*			
SC	.19*	.14*	.15*		
WT365	.30*	.19*	.28*	.23*	
BW	-.04	-.01	-.05	.02	.03

* P < .05

Correlations of PA with SC and WT365 were low to moderate with estimates from the pooled data to be .22 and .26, respectively. Based on the r_p of SC and WT365 with PA, the ability to identify sires that are superior for PA by measuring SC and WT365 would be low; and any measurable response in the PA of future progeny would be minimal when selection is for SC or WT365. Consequently, the desire to directly improve PA would require direct selection for PA.

Effect of Percentage Salers

Table 1 presents the means and ranges for the pooled data set. The .75 bulls were an average 12 d older than the FB group. Yet, FB bulls were 34.1 kg heavier than the .75 bulls. In 1991 means and ranges for HH were calculated (Table 2). Both FB and .75 bulls had similar HH of 139.0 and 138.2, respectively. Despite the similarity in HH, the .75 bulls were 13 d younger and 30 kg heavier than the FB bulls. A partial explanation could be attributed to heterosis. The fact that the .75 bulls were of similar HH but heavier weight could indicate that the nonadditive gene effect resulted in enhanced growth performance. Kress et al. (1988) reported post-natal growth to benefit from crossbreeding.

The effect of percentage Salers was nonsignificant ($P>.10$) for all pelvic dimensions in all analyses. Table 16 presents the R^2 values from 1990 which showed that percent Salers explained only minimal amounts of the variation in PW, PH and PA. In 1991 percent Salers failed to explain any of the variation in the pelvic dimensions, the R^2 value for all three pelvic traits was 0% (Table 17). It is postulated that heterosis could be masking the additive difference among percentage groups for pelvic dimensions.

Table 16. Percent increase in variation for pelvic area (PA), pelvic width (PW), pelvic height (PH) and scrotal scrotal circumference (SC) for 1990.

	PA	PW	PH	SC
P	.02	.02	.01	.02
P WT365[a]	.12	.09	.05	.05
P A[b]	.07	.05	.03	.07

WHERE P= PERCENT, A= AGE, WT365= 365-d weight

[a] Significant for PA and PW at P<.01 and PH and SC at P<.05

[b] Significant for PA at P<.01, PH and PW at P<.05 and SC at P<.10

A difference between percentage Salers groups was shown for SC (P<.05). In the pooled data set and in both individual years the .75 group exhibited a greater testicular circumference than the FB. Similar to pelvic dimensions, R^2 values for SC with percent Salers in the model were low with values of 2 and 1%, respectively, for 1990 and 1991. This effect could be partially attributed to heterosis, because .75 bulls had a higher WT365 and SC has been shown to be associated with post-natal growth. Coulter et al. (1979) measured SC and body weight at the conclusion of a 140-d performance test and reported partial correlation coefficients of .32 to .52 to exist between SC and body weight.

Table 17. Percent increase in variation for pelvic area (PA), pelvic width, (PW), pelvic height (PH) and scrotal circumference (SC) for 1991.

	PA	PW	PH	SC
P	.00	.00	.00	.01
P WT365[a]	.17	.20	.02	.10
P A[b]	.13	.12	.03	.08
P A A^2 P*A^2 P*A[c]	.15	.12	.06	.16
P*HH[d]	.32	.24	.12	.07
P HH $HH^{2,e}$	.36	.24	.20	.08

WHERE P= Percent, A = AGE, WT365 = 365-d weight and HH = Hip Height

[a] Significant for PA and PW at P<.01, and SC at P<.05.
[b] Significant for PA and PW at P<.01.
[c] Significant for SC at P<.05.
[d] Significant for PW at P<.01 and SC at P<.05.
[e] Significant for PA and PH at P<.05

It accounted for 2 and 1% of the variation in 1990 and 1991, respectively.

The full model with AGE was significant (P<.10) for PH and SC in the pooled data (Table 19). Reduced model analyses revealed that the linear effect of AGE was significant (P<.05) for PH in 1990 but not in 1991 (P>.10). The full model explained 17% of the variation in PH in the pooled data set (Table 18), this is much higher than the 3% that was explained by the linear effect of AGE in 1990. With regard to SC, the full model explained 22 and 16% of the variation in SC in the pooled data and in 1991, respectively. These results suggest that the rate at which SC develops and matures is affected by the level of Salers breeding.

Table 18. Percent increase in variation for pelvic area (PA), pelvic width (PW), pelvic height (PH) and scrotal circumference (SC) for 1990 and 1991.

	PA	PW	PH	SC
P YR	.02	.04	.00	.02
P WT365 YR[a]	.13	.14	.04	.07
P A YR[b]	.09	.09	.03	.07
P A A^2 BC*A BC*A^2 YR[c]	.19	.11	.17	.22

WHERE P= PERCENT, A= AGE, BC= BREED AND WT365 = 365-D WEIGHT
[a] Significant for PA, PW, PH and SC at P<.01
[b] Significant for PA and PW at P<.01
[c] Significant for PH at P<.10 and SC at P<.05

Contrast to PH, the full model with AGE failed to be significant (P>.10) in any analysis involving PA and PW. The linear effect of AGE in the reduced model was significant for PA and PW (P<.05) in 1990, 1991 and 1990-1991 with differences between years significant (P<.05) for PW, but not PA. Though significant, the linear effect of AGE explained only 5 and 7% in PA in 1990 and in the pooled data, respectively. The R^2 value in 1991 was larger with AGE explaining 13% of the variation in PA. Similar trends were found for PW, only 3 and 5% of the difference in PW were explained by AGE in 1990 and the pooled data set, whereas in 1991 AGE accounted for 12% of the variation in PW.

Table 19. F-statistics from the analyses for pelvic measurements and scrotal circumference in percentage Salers for 1990 and 1991.

Trait	Pct	Age[a] (WT365)	Age^2 (WT365^2)	Age*Percent (WT365*Pct)	Age^2*Percent (WT365^2*Pct)	YR
Pelvic area (cm^2)	0.00	17.38**	-	-	-	1.57
	11.16**	29.95**	-	-	-	2.47
Pelvic height (cm)	3.07†	2.1	1.90	3.04†	3.00†	1.08
	2.61†	7.42**	-	-	-	.59
Pelvic width (cm)	.02	13.03**	-	-	-	6.23*
	10.38**	26.91**	-	-	-	7.86**
Scrotal circ. (cm)	4.45*	2.02	1.72	4.30*	4.09*	.07
	.47	10.66**	-	-	-	.02

[a] First row per trait represents F-statistic when age was the covariate. Second row represents F-statistic when WT365 was the covariate.

** P<.01

* P<.05

† P<.10

Partial explanation of the differences between years can be attributed to the data. In 1991 there were fewer observations of bulls distributed over a wider range in age, when compared to 1990. Thus, the affect of AGE may be intensified.

In all analyses with WT365, only the linear effect of WT365 was significant for PA, PH, PW and SC. In 1991 the linear covariate WT365 accounted for substantial amounts of variation in PA and PW. It explained an additional 10, 17 and 11% of the variation in PA in 1990, 1991 and the pooled data, respectively. Similar results were reported for PW. The consistent importance of weight for PA is supported by Laster (1974) who reported that body weight was the most important variable in explaining variation in pelvic measurements. The nonsignificant interaction of WT365 with percent Salers in all analyses implies that pelvic growth, as a function of weight, was not different between Salers percentage groups ($P>.10$). Bulls of these weights exhibited linear relationships between pelvic growth and weight. With respect to SC, the effect of WT365 for explaining differences in SC was not as pronounced. The variable WT365 only accounted for 3, 9 and 5% of the variation in SC in 1990, 1991 and the pooled data. Based on F-statistics it can be concluded that testicular growth is linear through this range in weight.

Analysis of the full model with HH was not significant ($P<.10$) for PA and PH (Table 19). Thus, a reduced model was fit to the data and the quadratic effects of HH were

significant for PA and PH. This is contrary to the breed analysis which found both interactions to be significant for PA and PH. However, only the linear effects of HH were significant for PW and SC. These results suggest that when adjusted for HH, the rate by which PA and PH develop is not different between percentage Salers breeding. Since the full model was nonsignificant (P>.10) for PW and SC, then biologically they develop in a linear fashion through this range in HH.

In conclusion, minimal differences existed between the two classes of percentage Salers breeding. Bulls of .75 breeding were superior to FB bulls for pelvic growth. It is postulated that some of the differences in pelvic growth and scrotal circumference could be attributed to the effects of heterosis.

Table 20. F-statistics from the analyses of pelvic measurements and scrotal circumference in percentage Salers for 1991.

Trait	Pct	Age[a] (Hip) (WT365)	Age^2 (Hip^2) ($WT365^2$)	Age*PCT Hip*PCT (WT365*Pct)	Age^2*PCT (Hip^2*PCT) ($WT365^2$*Pct)
PA	1.63	11.16**	-	-	-
$(cm)^2$	.09	5.04*	4.59*	-	-
	1.13	14.47**	-	-	-
PH	.32	2.59	-	-	-
(cm)	.05	7.02**	6.74*	-	-
	.12	1.57	-	-	-
PW	1.40	9.56**	-	-	-
(cm)	.44	21.48**	-	-	-
	1.50	17.75**	-	-	-
SC	5.95*	2.55	2.38	5.81*	5.62*
(cm)	1.44	4.82*	-	-	-
	.19	5.95*	-	-	-

[a] First row per trait represents F-statistic when age was the covariate. Second row represents F-statistic when hip was the covariate. Third row represents F-statistic when WT365 was the covariate.

** P<.01
* P<.05

Experiment 2

Calving records were obtained on 307 of the 317 heifers that were measured for PH, PW and PA, the number of calves sired by each bull is presented in Table 45. Table 21 presents the least squares means (LSM) for, PA, PH, PW, BW, WT365 and WHRAT; while Table 22 shows the LSM for calving difficulty in each herd, from both the INTENSE and DIFF analyses. Differences existed between all herds for PW and PA ($P<.01$). Herds 1 and 3 had different PH ($P<.01$) and also differed ($P<.01$) from herds 2 and 4. Yet, no difference existed ($P>.10$) in PH between herds 2 and 4. Herd 1 heifers were inferior when compared to herds 2, 3 and 4 for all pelvic dimensions. They possessed the narrowest PW and the shortest PH, as a result they had the smallest PA. WT365 for herds 1 and 3 was also different ($P<.01$) than herds 2 and 4. Because of the differences between herds for both PA and WT365, it is possible that PA is confounded with both HERD and WT365.

Differences existed between herds 1, 2 and 3 with herd 4 for WHRAT and CDS. The differences in WHRAT were not significant ($P>.10$). Herds 1, 2 and 3 had a WHRAT ratio of .78, .78 and .77 while herd 4 had a pelvic shape ratio of .87. The difference in the WHRAT ratio for herd 4 could be a result that the heifers were measured by a different technician. Least square means for CDS were significant ($P<.05$) between herds. The LSM of 2.54 for CDS in herd 1 indicates that most

heifers required, on average, from slight assistance to mechanical assistance at parturition.

In both the INTENSE and DIFF analyses of dystocia, SEX of calf was significant for CDS (P<.01; Table 23). Least square means for CDS was the same for the two classifications of dystocia. In both analyses of dystocia male calves experienced more dystocia than heifer calves. This is supported by Rutter et al., (1983) who reported sex of calf to be significant for CDS, they reported male calves to have an increased incidence and severity of dystocia. It is believed that the affect of calf sex is through the added BW of the calf, because male calves weighed an average of 2.3 kg more than female calves (P<.01). This theory is in agreement with Price and Wiltbank (1978) who reported that a relationship exists between sex of calf, calf BW and gestation length. They concluded that male calves had the heaviest BW and had the most trouble calving.

Tables 24 and 25 present the F-statistics from the analyses of variance for the various models with the covariates and their effect on dystocia. The maternal influence on dystocia was evaluated by adding dam PA to the base model. Pelvic area was not significant (P=.85) when the INTENSE model was evaluated. In the DIFF analysis PA still failed to affect CDS (P>.10). This is in contrast to past research that found PA of the dam to be important for dystocia in 2-yr old heifers (Bellows et al., 1971b; Laster, 1973; Deutscher, 1978; and Johnson et al., 1988).

Table 21. Least squares means for the individual traits in each herd, from the model SEX, HERD and SIRE(HERD).

HERD	BW	PA	PW	PH	WT365	WHRAT
1	35.0±1.20[a]	138.6±4.2[a]	10.46±.18[a]	13.23±.21[a]	281.3± 9.2[a]	.78±.01[a]
2	38.0± .70[b]	167.6±2.4[b]	11.47±.11[b]	14.64±.12[b]	341.3±14.4[b]	.78±.02[a]
3	35.2± .48[a]	156.2±1.7[c]	11.03±.07[c]	14.12±.08[c]	292.4± 3.1[a]	.77±.01[a]
4	36.1± .57[a]	188.8±2.0[d]	12.90±.08[d]	14.62±.10[b]	406.6±41.4[b]	.87±.06[a]

[a,b,c,d] Means in the same column with different superscripts differ at (P<.01).

Table 22. Least squares means from the analyses of variance for calving difficulty from the base model SEX, HERD and SIRE(HERD).

	CDS=Sx H S(H)[a]	CDS=Sx H S(H)[b]
HERD	LSM[c]	LSM[a]
1	2.54±.20[d]	1.72±.11[d]
2	1.30±.11[e,f]	1.19±.06[e,f]
3	1.43±.08[e]	1.22±.04[e]
4	1.04±.09[f]	1.04±.05[f]

[a] From the model where Sx=Sex, H=HERD and S(H)=SIRE(HERD) and CDS=1-5
[b] From the model where Sx=Sex, H=HERD and S(H)=SIRE(HERD) and CDS=1 or 2
[c] Least square mean ± standard error
[d,e,f] Means in the same column with different superscripts differ at (P<.01)

Table 23. Least squares means for calving difficulty and birth weight (BW) in the different sexes.

HERD	CDS=Sx H S(H)[a] LSM[c]	CDS=Sx H S(H)[b] LSM[c]	BW LSM[c]
Bull	1.69±.07[a]	1.69±.07[a]	37.2±.43[d]
Heifers	1.46±.08[b]	1.46±.08[b]	34.9±.48[e]

[a] From the model where Sx=Sex, H=HERD and S(H)=SIRE(HERD) and CDS=1-5

[b] From the model where Sx=Sex, H=HERD and S(H)=SIRE(HERD) and CDS=1 or 2

[c] Least square mean ± standard error

[d,e,f] Means in the same column with different superscripts differ at (P<.05)

When BW was added to the model it was found to be significant (P<.01) for both classifications of dystocia. SEX was not significant (P>.10) for INTENSE CDS when included with BW, but SEX did affect CDS (P<.05) in the DIFF analysis. Though SEX was not significant in the INTENSE model, it could be hypothesized that the effect of SEX is through the effect of BW on CDS. The effect of sex of calf, and its affect on BW and dystocia has been defined (Rutter et al., 1983). The significance of BW on CDS is supported by past research that has determined that BW of the calf is the most important factor contributing to dystocia (Laster et al., 1971; Smith et al., 1976; and Naazie et al., 1989).

Table 24. F-Statistics from the analyses of severe (INTENSE) calving difficulty with different variables in the model.

	SEX	HERD	SIRE(HERD)	PA	BW	WHRAT	WT365
INTENSE	8.57**	16.23**	3.87**				
	8.62**	10.71**	3.84**	.10			
	1.74	20.57**	2.35**		34.70**		
	1.76	11.87**	2.34**	1.81	36.50**		
	8.12**	12.38**	4.03**			5.35**	
	1.62	16.33**	2.46**		33.54**	4.40*	
	8.55**	15.65**	3.73**				1.95
	1.74	16.23**	2.33**		32.42**		.02

** P<.01
* P<.05

Table 25. F-statistics from the analyses of the incidence (DIFF) of calving difficulty with different variables in the model.

	SEX	HERD	SIRE(HERD)	PA	BW	WHRAT	WT365
DIFF	14.68**	7.59**	3.20**	.03			
	5.77**	14.01**	1.89**		26.21**		
	5.80*	7.84**	1.91**	1.13	27.31**		
	14.16**	8.24**	3.40**			4.57**	
	5.60*	10.53**	1.99**		25.21**	3.71†	
	14.69**	11.71**	3.09**				2.28**
	5.85*	11.56**	1.86**		23.83**		.17

** P<.01
* P<.05
† P<.10

When BW and PA were both included in the INTENSE CDS model, PA and SEX were not significant (P>.10). As in the previous analyses with BW and SEX it could be that SEX is masked by the effect of BW. When CDS was evaluated as DIFF, SEX was significant for dystocia (P<.05). In both the INTENSE and DIFF analyses PA failed to affect dystocia (P>.10). Computed standardized regression coefficients (b') of -007 for PA and .07 for BW indicate that BW is 10 times more important than PA when evaluating causes of dystocia. Bellows et al. (1971b) analyzed b' for PA and BW with dystocia in Angus and reported values of -.23 and .65; though the difference in magnitude is smaller than the values of this data, it does serve to support the importance of BW, rather than PA when evaluating the importance of causative factors for dystocia.

When WT365 was included in the model it failed to be significant (P=.16) for its effects on INTENSE dystocia. However, when dystocia was evaluated as DIFF, WT365 approached significance for dystocia (P=.13). Though PA was not significant for CDS the difficulty experienced by herds 1 and 3 can be partially explained by their yearling weight. Herds 1 and 3 had the lowest WT365 (Table 21) with LSM of 281.3 and 292.4 kg, respectively, while also having the highest CDS. Herds 2 and 4 had the highest WT365 with LSM of 341.3 and 406.0 kg, respectively, but also had the highest BW calves; yet, these heifers also experienced the least amount of dystocia.

It may be hypothesized that heifers that weigh more at 365 d of age are more advanced skeletally. Since there was no postpartum measurement of dam size and the ranking of CDS is the same as the standings for 365 d weight and PA, it could be assumed that the positive correlation between yearling and calving size allows larger yearling heifers to be more capable of delivering a calf with a lower incidence of difficulty. Therefore, 365-d weight should be sufficient to indicate a relative level of skeletal development and maturity. However, it is possible that WT365 could incorrectly reflect skeletal growth and the possibilty of calving difficulty could occur. Arnett et al. (1971) reported that obese heifers required more assistance at parturition, while Philipsson (1976d) concluded that dystocia would be more pronounced in heifers that are too fat or are extremely thin.

No difference ($P>.10$) existed between herds for WHRAT, an indicator of pelvis shape, but it was significant ($P<.01$) for CDS when it was included in the INTENSE model with SEX, HERD and SIRE(HERD). When BW was added to the model WHRAT still had an affect on CDS ($P<.05$). Regression coefficients indicate that as WHRAT decreased CDS increased. Biologically speaking, heifers with a narrow pelvis endured a greater intensity of dystocia. This is supported by Naazie et al. (1989) who concluded that pelvic width provided as much information on dystocia as did PA. However, this conclusion is in contrast to a study by Laster et al. (1973) who concluded that pelvic

height was more important than pelvic width for explaining dystocia in Angus, Brahman, Devon and Holstein sired calves.

In Salers data, percentage Salers was non-significant (P>.10) in both the INTENSE and DIFF analyses of CDS. Analysis of LSM between percentage groups found no differences (P>.10) to exist for PW and PA in the different groups. A difference (P<.05) did exist for PH, but these differences, though significant, were minimal. With the exception of the FB heifers, WT365 was not significant (P>.10) between percentage groups. As a result of the uniformity in the expression of traits between the various percentage categories, it would be difficult for this data set to elucidate any differences in the groups that could enhance or reduce CDS; especially since only the .75 heifer data set was of sufficient size to draw conclusions.

The base model SEX, HERD and SIRE(HERD) accounted for 45%, and 44% of the variation in dystocia in the INTENSE and DIFF analysis, respectively. With the exception of BW, the addition of all other independent variables resulted in only a minimal increase in the R^2 values (Table 26). Birth weight explained an additional 6% of the variation in the INTENSE model and 5% in the DIFF model.

Though the difference in R^2 estimates between the two analyses of CDS is small it could be postulated that BW not only affects dystocia but has an effect on the severity of dystocia. This could be explained by the fact that heavy BW

calves will be larger in overall tissue mass, therefore primiparous heifers would have difficulty delivering the heavier fetus through the birth canal, even if their pelvic measurements suggested they might be capable of delivering a large calf at parturition.

Calf BW and SIRE(HERD) explained similar amounts of variation in dystocia. When a reduced model analysis was performed with SEX and HERD, 26 and 28% of the variation in dystocia was explained by these variables in the INTENSE and DIFF model, respectively. The inclusion of SIRE(HERD) explained an additional 19% and 16%, respectively. Birth weight accounted for an extra 15 and 12% of the difference in CDS when it was added to the base model. It could be postulated that the effects of SIRE(HERD) and BW are similar. Sires that throw heavy calves would have a higher incidence of dystocia because of the BW of the calf.

Similar conclusions on the effect of sire and BW were drawn by O'Mary et al. (1972) and Lawlor, Jr. et al. (1984) who reported breed of sire to affect dystocia. They reported that Charolais, Simmental and Limousin sired calves experienced a higher incidence of dystocia in Hereford and Angus cows while Hereford and Angus sired calves enjoyed a lower degree of dystocia in cows of similar breeding.

Table 26. Percent increase in variation for each individual trait with dystocia across all herds.

	CDS (1-5)[a]	CDS (1 OR 2)[b]
BWT	.06	.05
PA	.00	.00
PW	.00	.01
PH	.00	.00
WT365	.01	.01
WHRAT	.01	.01
PTDAM	.00	.00
PTCALF	.00	.00

[a] R^2 FOR BASE MODEL CDS = SEX HERD SIRE(HERD) =45%, WHEN CDS=1-5

[b] R^2 FOR BASE MODEL CDS = SEX HERD SIRE(HERD) =44%, WHEN CDS=1 or 2

Pelvic area failed to explain any additional variation in dystocia. This is in contrast to past research that found PA to be an important dam effect in regard to dystocia. The addition of other pelvic dimensions failed to affect the R^2 values, both PH and PW had an R^2 estimate of 0%. There was a slight increase in the variation explained by pelvic dimensions when they were evaluated as pelvic shape. The variable WHRAT explained an additional 1% variation in CDS. Though this is only a minimal increase it explains more variation than any other of the pelvic variables. WT365 also had a minimal effect on the differences in calving difficulty.

Similar to WHRAT, WT365 accounted for an additional 1% of the variation in dystocia.

Heritability estimates for PA, PW and PH were moderate to high when AGE was the covariate with estimates of .39, .45 and .79, respectively (Table 27). As a result of the large standard error (SE) of .195, relative to the h^2 estimate for PA, the reliability of the h^2 estimate is diminished. When WT365 was the covariate higher h^2 estimates were attained for all pelvic traits. Estimates of .53, .47 and .91 were calculated for PA, PW and PH. Contrast to when AGE was the covariate, the SE of .208 for PA was small enough, relative to the h^2 estimate for PA, to assume some confidence for the h^2 estimate. It could be assumed that WT365, as a covariate allows for more accountability of the environmental effects, hence the increased h^2 estimates.

The difference in h^2 between PW and PH could be a result of the procedure used. This author believes that the reference points used for PH are easier to palpate, thus resulting in more accurate measurement. This is supported by Green et al., (1988) who reported a similar conclusion. However, Neville et al., (1978) reported different results and felt that the PW measurement was more easily obtained. Though differences exist among technicians in regard to which pelvic measurement is more readily attained, technicians should concentrate in being consistent in the technique and procedure they use to obtain pelvic measurements.

Table 27. Heritability estimates and genetic, phenotypic and environmental correlations.

Trait	h^2	PA	PW	PH
PA	.39[a]±.195		.55[c]±.24	.70[c]±.16
	.53[b]±.208		.83[c]±.24	.77[c]±.16
			1.03[c]±.24	1.06[c]±.16
PW	.45[a]±.201	.65[d]±.17		-.20[c]±.29
	.47[b]±.203	.84[d]±.17		.28[c]±.29
		1.04[d]±.17		1.18[c]±.29
PH	.79[a]±.228	.78[d]±.10	.03[d]±.29	
	.91[b]±.236	.78[d]±.10	.32[d]±.29	
		1.17[d]±.10	1.40[d]±.29	

[a] h^2 estimate when age was the covariate

[b] h^2 estimate when WT365 was the covariate

[c] 1st row equals r_g estimate when age was the covariate
2nd row equals r_p estimate when age was the covariate
3rd row equals r_e estimate when age was the covariate

[d] 1st row equals r_g estimate when WT365 was the covariate
2nd row equals r_p estimate when WT365 was the covariate
3rd row equals r_e estimate when WT365 was the covariate

Experiment 3

Effect of heifer-sire selection

Table 28 re-defines the abbreviations for the simulated variables used in the heifer/sire selection analysis, and the heterosis simulation.

Table 28. Defined abbreviations for all simulated variables.

Variable	Abbreviation
Heifers retained for breeding	PBRD
Sire EPD for birth weight	SEPD
Heifer yearling pelvic area	YRLGPA
Heifer calving pelvic area	CLVGPA
Calving pelvic area/ birth weight ratio	RATIO
Calving difficulty score	CDS
Incidence of dystocia	DIFF
Calf birth weight	BW
Calf heterosis	FC
Dam heterosis	FD

Traits of the calf. Table 29 presents the F-statistics from the analyses of variance for calf traits. Only the main effects of SEPD and SEX were significant ($P<.01$) for all calf traits, while PBRDxSEPD and REP(PBRDxSEPD) were non-significant ($P>.10$). PBRD was significant for BW, CDS ($P<.05$) and RATIO ($P<.10$), however it failed to be significant ($P>.10$) for DIFF. The failure of PBRD to significantly reduce the incidence of dystocia conflicts with conclusions reached by Deutscher (1986) who reported that the incidence of dystocia could be reduced by selecting heifers for pelvic area.

Results of the response surface analysis were similar to the observation analysis (Table 30). Only the main effect of SEPD was significant for all calf traits in the full model.

The interactions of PBRDxSEPD and $PBRD^2xSEPD^2$, in addition to the quadratic effects of PBRD and SEPD, failed to have an affect on any of the calf traits (P>.10). When reduced models were fit to the data PBRD was shown to affect BW, RATIO and CDS. However, it still failed to affect DIFF (P>.10). Regression coefficients for Figures 7 and 8 were derived from the reduced models that only included the main effects of PBRD and SEPD.

Traits of the Dam. Only the main effect of PBRD was significant (P<.01) for YRLGPA and CLVGPA. Selection strategies based on increased pressure for YRLGPA did yield heifers with larger PA at parturition (P<.05), yet, it still failed to affect both INTENSE and DIFF dystocia. The significance of PBRD for YRLGPA and CLVGPA is easily explained by the fact that different amounts of selection pressure were used. Since the r_p for YRLGPA and CLVGPA is high (.70; Table 5) it would be expected that yearling heifers selected for PA would have a larger PA at calving.

Least squares means for YRLGPA and CLVGPA are presented in Table 32. They illustrate that at best only a 10 and 12cm^2 increase in YRLGPA and CLVGPA, respectively, will result if the P40 heifers versus the P100 heifers are retained for breeding. The minimal increase in YRLGPA and CLVGPA, despite strong selection for PA, reflects the minimal variation in PA and supports the low coefficient of variation of 7.5% for heifer PA.

Figures 3 and 4 display results of the Chi-square analyses with SEPD and its ensuing effect on the frequency of DIFF and CDS. The graphs support the data which indicates that SEPD had a much more dramatic effect, when compared to PBRD (Figures 5 and 6), on the frequency and severity of dystocia. When SEPD increased from -2.7 to 1.8 kg the frequency of parturitions that had no difficulty declined from 44 to 23%. SEPD also affected the severity of dystocia. As SEPD increased from -2.7 to 1.8 kg the frequency of parturition that required mechanical assistance increased dramatically from 2.14 to 20.2%. Chi-square results also reveal that a change of 1.8 kg in SEPD is required to significantly change the frequency of CDS, while a change of 2.7 kg in SEPD is needed to significantly alter the incidence of DIFF. For producers this implies that a change of 1.8 kg in the BW EPD of the sires they select would be required to alter the frequency of CDS. The affect of SEPD is expressed, as expected, in the BW of the calf. Calves sired by bulls with an SEPD of -2.7 kg had an average BW of 31.63 kg while calves sired by heavy BW bulls (SEPD = 1.8 kg) had an average BW of 36.2 kg (Table 31).

Table 29. F-statistics from the analyses of variance for calf and dam traits[a].

Trait	PBRD	SEPD	PBRD*SEPD	REP(PBRD*SEPD)	SEX
BW	16.20**	202.70**	.63	1.12	385.60**
RATIO	8.11**	175.46**	.94	.88	321.35**
CDS	12.38**	174.82**	.82	.84	317.29**
DIFF	1.00	25.01**	.71	.81	67.89**
YRLGPA	452.53**	.33	1.32	1.24	-
CLVGPA	166.53**	.46	.88	.94	-

** P<.01
* P<.05
[a] Main effects fit discrete classes.

Table 30. F-statistics from the response surface analyses of calf and dam traits.

Trait	PBRD	SEPD	PBRD*SEPD	$PBRD^2*SEPD^2$	$PBRD^2$	$SEPD^2$
BW	42.74**	957.20**	-	-	-	-
RATIO	25.73**	886.73**	-	-	-	-
CDS	40.80**	946.07**	-	-	-	-
DIFF	1.76	154.47**	-	-	-	-
YRLGPA	1090.57**	0.00	-	-	-	-
CLVGPA	537.29**	.91	-	-	-	-

** P<.01
* P<.05

Table 31. Least squares means by level of sire expected progeny difference (SEPD) for birth weight (BW).

Trait	SEPD (kg)					
	-2.7	-1.8	-.9	0	.9	1.8
BW	31.63±.12[a]	32.65±.12[b]	33.44±.12[c]	34.18±.12[d]	35.13±.12[e]	36.20±.12[f]
RATIO	8.21±.028[a]	7.93±.028[b]	7.73±.028[c]	7.58±.028[d]	7.37±.028[e]	7.13±.028[f]
CDS	1.52±.014[a]	1.64±.014[b]	1.73±.014[c]	1.82±.014[d]	1.94±.014[e]	2.08±.014[f]
DIFF	.55±.013[a,c]	.61±.013[b,c]	.63±.013[b]	.68±.013[c]	.71±.013[c]	.76±.013[d]

[a,b,c,d,e] Columns with different superscripts differ at P<.05

Table 32. Least squares means by level of percent heifers (PBRD) retained for breeding

Trait	PBRD			
	40	60	80	100
BWT	34.25±.096[a]	34.08±.096[a]	33.73±.096[b]	33.42±.095[b]
RATIO	7.73±.023[a]	7.69±.023[a]	7.63±.023[b]	7.58±.022[b]
CDS	1.74±.011[a]	1.77±.011[a]	1.81±.011[b]	1.83±.011[c]
DIFF	.65±.011[a]	.65±.011[a]	.65±.011[a]	.67±.011[a]
YRLGPA	159.93±.23[a]	157.24±.23[b]	153.46±.23[c]	149.77±.23[d]
CLVGPA	261.44±.39[a]	258.37±.39[b]	253.41±.39[c]	249.86±.39[d]

[a,b,c] Columns with different superscripts are significant at P<.05

Retention of P40 versus P100 heifers did not have as large an impact on DIFF dystocia as was expressed by SEPD. The relationship for the frequency of dystocia between different heifer groups was virtually static (Figure 5). These results were replicated when the frequency of the different CDS were analyzed. Selecting P40 heifers instead of P100 heifers resulted in only a 4% reduction in the frequency of difficult deliveries (Figure 6).

Quantitatively, regression analyses illustrate the affect of SEPD and PBRD on CDS. Each .9 kg decrease in SEPD resulted in a .10 decrease in CDS (Figure 7), whereas each 20% increase in selection intensity for YRLGPA only yielded a .03 reduction in CDS score. Thus, the potential reward from the impact of strong selection intensity for PBRD will be less than that received from selecting for SEPD. Experimental research on dystocia supports these results. Bellows et al. (1971b) and Price and Wiltbank (1979) concluded that PA was important, but BW of the calf accounts for most of the explainable variation in dystocia.

The range in variation that accompanied CDS is illustrated in Table 33. Though not tested statistically, the maximum CDS did not differ greatly between the different mating combinations. Regardless if the mating system reflected easy calving or growth performance the maximum CDS only ranged between 2.9 and 3.8.

These results demonstrate the diverse biological variation within a trait, and the difficulty in achieving maximum reductions in dystocia in a breeding program.

Table 33. Range of calving difficulty score (CDS) within each mating combination.

Trait	PBRD	SEPD	Minimum	Maximum
CDS	40	-2.7	1.0	2.9
	40	-1.8	1.0	3.1
	40	-.9	1.0	3.1
	40	0	1.0	3.6
	40	.9	1.0	3.4
	40	1.8	1.0	3.6
	60	-2.7	1.0	2.9
	60	-1.8	1.0	3.2
	60	-.9	1.0	3.0
	60	0	1.0	3.5
	60	.9	1.0	3.6
	60	1.8	1.0	3.4
	80	-2.7	1.0	2.9
	80	-1.8	1.0	3.8
	80	-.9	1.0	3.4
	80	0	1.0	3.8
	80	.9	1.0	3.3
	80	1.8	1.0	3.6
	100	-2.7	1.0	3.0
	100	-1.8	1.0	3.3
	100	-.9	1.0	3.6
	100	0	1.0	3.3
	100	.9	1.0	3.6
	100	1.8	1.0	3.7
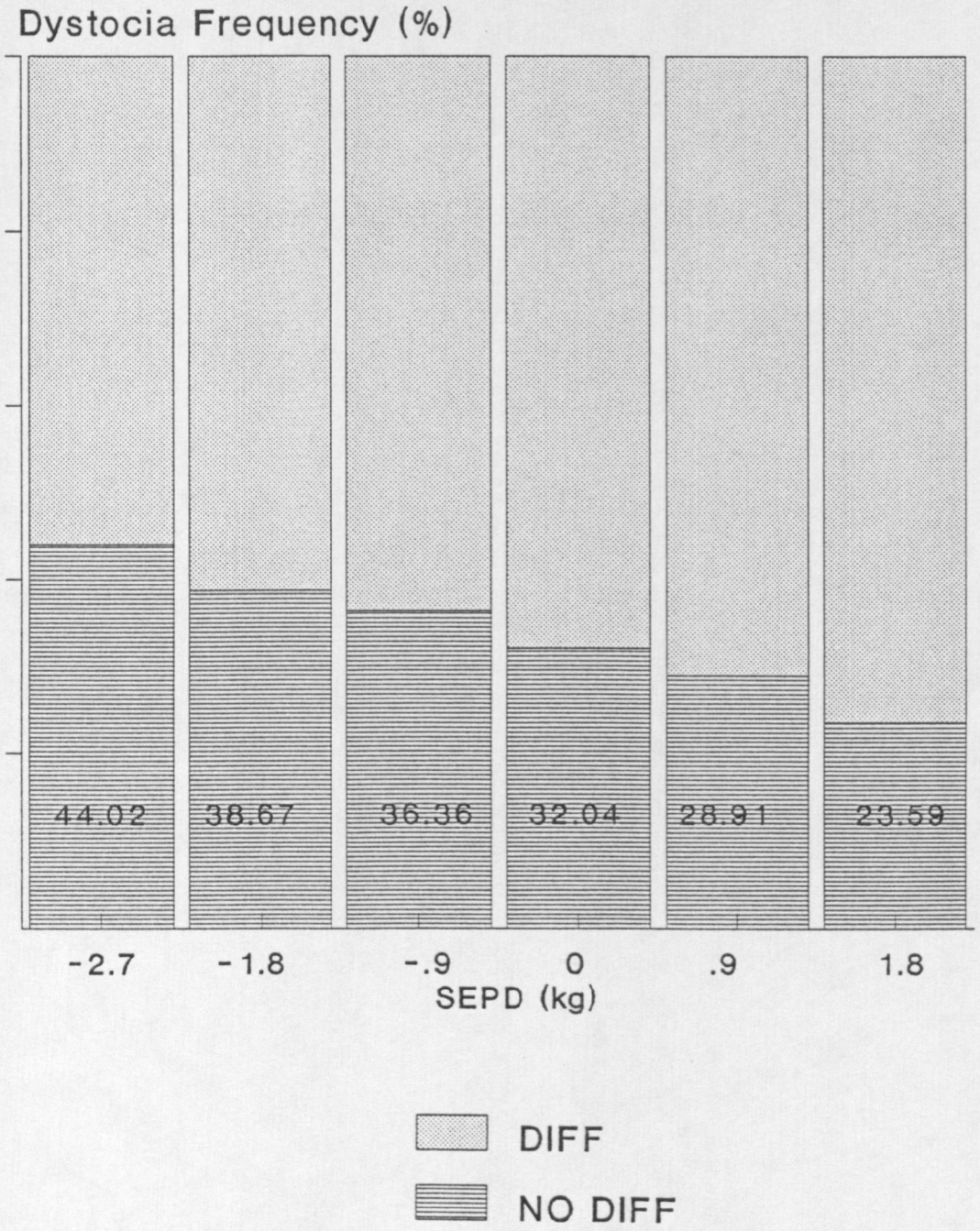
Figure 3. Chi-square analysis for the incidence of dystocia (DIFF) by level of sire expected progeny difference (SEPD) for birth weight (BW).