Separation of H□2□S from N□2□ by selective permeation through polymeric membranes
by Robert Leo Heyd

A thesis submitted in partial fulfillment of the requirements for the degree of MASTER OF SCIENCE in Chemical Engineering
Montana State University
© Copyright by Robert Leo Heyd (1976)

Abstract:
Vinylidene fluoride films modified with several different chemicals, and several commercially available films were tested for the separation of H2S from H2S-N2 mixtures. Flux and separation factor values were obtained over a temperature range from 23°C to 125°C with an operating pressure of 500 psig.

Microscopic examination of the surfaces of modified vinylidene fluoride membranes indicated that uniform polymer films could be produced by allowing polymer solutions to stand for 15 days to insure complete dispersion of the polymer along with de-gassing the solution before pouring it onto a flat plate to form membrane films.

The following chemicals were added as modifiers to vinylidene fluoride: sulfolene, 3-methyl sulfolene, 1-methyl-2-pyrrolidinone , morpholine, monoethanol amine, triethanolamine, diisopropanol amine, and monoisopropanol amine. Good separation of H2S from a 5% mixture of H2S in N2 was obtained using 3-methyl sulfolene, morpholene, monoisopropanol amine, and diisopropanol amine. For example, a film modified with 10% 3-methyl sulfolene gave a permeate, containing 33% H2S at 50°C.

The commercially available polymer films tested included: dimethyl silicone, silicone polycarbonate copolymer, poly vinyl fluoride, polyamide, heat stabilized polyamide, polysulfone and polyethersulfone. Very high flux values and good separation were found with several of these polymers.

Strong trends toward increasing flux with increasing temperature, and an increasing percentage of H2S in the permeate gas with increasing temperature were observed.

Separation factor values for H2S, determined using a 5% mixture of H2S in N2, ranged from less than .1 to 12.9. Flux values ranged from less than 10-5 m3(STP)/m2 hr to .727 m3(STP)/m2hr.

Tests conducted with a feed gas containing .27% H2S in a H2S/N2 mixture showed that permeate flux decreased as the percentage of H2S in the feed gas decreased. No definite trend in the change of separation factor with feed gas composition was observed.

STATEMENT OF PERMISSION TO COPY

In presenting this thesis in partial fulfillment of the requirements for an advanced degree at Montana State University, I agree that the Library shall make it freely available for inspection. I further agree that permission for extensive copying of this thesis for scholarly purposes may be granted by my major professor, or, in his absence, by the Director of Libraries. It is understood that any copying or publication of this thesis for financial gain shall not be allowed without my written permission.

Signature Robert L. Heyd

Date December 3, 1976

SEPARATION OF H_2S FROM N_2 BY SELECTIVE PERMEATION THROUGH POLYMERIC MEMBRANES

by

ROBERT LEO HEYD

A thesis submitted in partial fulfillment of
the requirements for the degree

of

MASTER OF SCIENCE

in

Chemical Engineering

Approved:

Chairperson, Graduate Committee

Head, Major Department

Graduate Dean

MONTANA STATE UNIVERSITY
Bozeman, Montana

December, 1976

ACKNOWLEDGMENT

The author wishes to thank the entire staff of the Chemical Engineering Department at Montana State University for their criticisms and suggestions which led to the completion of this project.

Special thanks goes to Dr. F. P. McCandless for his advice, assistance, and encouragement throughout this investigation. Also, thanks are extended to Mr. Silas Huso and Mr. James Tillery for their help in tracking down various equipment pieces needed during the course of this research work.

The author is indebted to the National Science Foundation for the financial support which helped to make this research project possible.

The author wishes to thank his parents for their encouragement and support.

Finally, thanks goes to Sherry Greene for typing this thesis.

TABLE OF CONTENTS

	Page
VITA	ii
ACKNOWLEDGMENTS	iii
LIST OF TABLES	viii
LIST OF FIGURES	ix
ABSTRACT	xii
I. INTRODUCTION AND PURPOSE	1
II. REVIEW OF THE LITERATURE	3
COMMERCIAL PROCESSES FOR CONCENTRATING H_2S	3
COMMERCIAL PROCESSES FOR CONVERTING H_2S TO ELEMENTAL SULFUR	5
LABORATORY SCALE H_2S REMOVAL PROCESSES	7
USE OF MEMBRANES FOR GAS SEPARATIONS	10
MEMBRANES FOR SEPARATING H_2S FROM GAS MIXTURES	12
III. THEORETICAL BACKGROUND	14
NATURE OF THE TRANSPORT PROCESS	14
TRANSPORT THROUGH A GASEOUS FILM	14
TRANSPORT THROUGH A POLYMERIC MEMBRANE	14
POLYMER CHEMISTRY ASPECTS	18
TEMPERATURE EFFECTS	20
DEFINITION OF THE SEPARATION FACTOR	22
IV. EXPERIMENTAL EQUIPMENT, MATERIALS AND PROCEDURES	23
DESCRIPTION OF EQUIPMENT	23

TABLE OF CONTENTS (Cont)

Page

1. PERMEATION CELL 23

2. CONSTANT TEMPERATURE ENCLOSURE AND TEMPERATURE MEASURING EQUIPMENT 26

3. GAS MIXTURE STORAGE AND FEEDING EQUIPMENT 27

4. PURGE GAS SYSTEM COMPONENTS 29

5. PERMEATE RATE MEASUREMENT EQUIPMENT 29

6. GAS COMPOSITION ANALYSIS EQUIPMENT 30

7. MEMBRANE SURFACE AND COMPOSITION ANALYSIS EQUIPMENT 30

MATERIALS 31

EXPERIMENTAL PROCEDURE 34

1. PREPARATION OF GAS MIXTURES 34

2. CALIBRATION OF GAS CHROMATOGRAPH 34

3. CALIBRATION OF EXHAUST GAS ROTAMETER 35

4. MEMBRANE MANUFACTURE 35

5. MICROSCOPIC EXAMINATION OF MEMBRANE SURFACES 40

6. TEST FOR THE PRESENCE OF RESIDUAL SOLVENT USING INFRARED SPECTROSCOPY 41

7. PREPARATION FOR A TEST RUN 41

8. TEST RUN PROCEDURE 42

V. EXPERIMENTAL RESULTS AND DISCUSSION 44

MODIFIED VINYLIDENE FLUORIDE FILMS 44

1. MATERIALS TESTED 44

TABLE OF CONTENTS (Cont)

Page

2. RESULTS OF MICROSCOPIC ANALYSIS 45

3. THE DATA 60

4. DISCUSSION - FILMS WITH NO MODIFIER ADDED 69

5. DISCUSSION - FILMS WITH MODIFIER ADDED 74

6. EFFECT OF TEMPERATURE 79

COMMERCIALLY AVAILABLE POLYMER FILMS 80

1. MATERIALS TESTED 80

2. THE DATA 81

3. DISCUSSION 81

4. EFFECT OF TEMPERATURE 88

EFFECT OF FEED GAS COMPOSITION 90

1. MATERIALS TESTED 90

2. THE DATA 90

3. DISCUSSION 91

SUMMARY OF BEST RESULTS 97

ANALYSIS OF ERRORS 99

VI. CONCLUSIONS AND RECOMMENDATIONS 101

CONCLUSIONS 101

RECOMMENDATIONS 102

1. MODIFIED VINYLIDENE FLUORIDE FILMS 102

2. COMMERCIAL FILMS 103

TABLE OF CONTENTS (Cont.)

Page

3. ALL FILMS 104

VII. REFERENCE FOOTNOTES 106

VIII. APPENDIX 110

TABLE OF NOMENCLATURE 111

IX. BIBLIOGRAPHY 113

LIST OF TABLES

Table		Page
V-1	Summary of Test Results for Modified Vinylidene Fluoride Films	61
V-2	Summary of Test Results for Commercially Available Polymer Films	82
V-3	Comparison of Flux and Separation Values for Two Different Feed Gas Compositions	92
V-4	Summary of Best Separation Results	98

LIST OF FIGURES

Figure		Page
III-1	Concentration Profiles of Component a in the Membrane and its Vicinity.	15
IV-1	Simplified Diagram of Permeation Equipment	24
IV-2	Permeation Cell Diagram.	25
IV-3	Constant Temperature Enclosure - High Temperature. . . .	28
IV-4	Calibration of Gas Chromatograph - Sample Volume vs. Peak Weight x Attenuation for Nitrogen and Hydrogen Sulfide.	36
IV-5	Calibration Curve for Gas Chromatograph - Area Percent of H_2S vs. Volume Percent of H_2S	37
IV-6	Rotameter Calibration Curve - Flow Rate (STP) vs. Rotameter Reading.	38
V-1	Surface View of Membrane Containing 15% Sulfolene at 500x Magnification - Membrane Formed Immediately from Polymer Solution.	46
V-2	Cross Section of Membrane Containing 15% Sulfolene at 600x Magnification - Membrane Formed Immediately from Polymer Solution.	47
V-3	Surface View of Membrane Modified with 12% Sulfolene at 400x Magnification - Polymer Solution De-gassed Following a 24 Hour Solution Period.	50
V-4	Surface View of Membrane Modified with 10% Diisopropanolamine at 700x Magnification - Polymer Solution De-gassed Following a 24 Hour Solution Period.	51
V-5	Surface View of Membrane Modified with 10% 1-Methyl-2-Pyrrolidinone at 400x Magnification - Polymer Solution De-gassed Following a 24 Hour Solution Period .	52

LIST OF FIGURES (Cont)

Figure		Page
V-6	Surface View of Membrane Modified with 5% Triethanolamine at 700x Magnification - Polymer Solution De-gassed Following a 24 Hour Solution Period.	53
V-7	Surface View of Membrane Modified with 10% Triethanolamine at 400x Magnification - Polymer Solution De-gassed Following a 15 Day Solution Period.	55
V-8	Surface View of Membrane Modified with 10% Morpholine at 400x Magnification - Polymer Solution De-gassed Following a 15 Day Solution Period.	56
V-9	Surface View of Membrane Modified with 10% Triethanolamine at 400x Magnification - Polymer Solution De-gassed Following a 15 Day Solution Period.	57
V-10	Surface View of Membrane Modified with 10% Mono-isopropanolamine at 400x Magnification - Polymer Solution De-gassed Following a 15 Day Solution Period.	58
V-11	Surface View of Membrane Modified with 10% Mono-isopropanolamine at 1000x Magnification - Polymer Solution De-gassed Following a 15 Day Solution Period . .	59
V-12	Separation Factor vs. Temperature for Some Modified Vinylidene Fluroide Films	65
V-13	Separation Factor vs. Temperature for Alkanolamine Modifiers in Vinylidene Fluoride.	66
V-14	Flux vs. Temperature for Some Modified Vinylidene Fluoride Films.	67
V-15	Flux vs. Temperature for Alkanolamine Modifiers in Vinylidene Fluoride	68
V-16	Results of Infrared Spectrophotometer Tests on Unmodified Vinylidene Fluoride Films.	70

LIST OF FIGURES (Cont)

Figure		Page
V-17	Separation Factor vs. Temperature for Unmodified Vinylidene Fluoride Films	72
V-18	Flux vs. Temperature for Unmodified Vinylidene Fluoride Films	73
V-19	Separation Factor vs. Temperature for Commercially Available Films	84
V-20	Flux vs. Temperature for Commercially Available Films	85
V-21	Effect of Feed Gas Composition on Separation For Vinylidene Fluoride with 10% 3-Methyl Sulfolene Modifier	93
V-22	Effect of Feed Gas Composition on Flux For Vinylidene Fluoride with 10% 3-Methyl Sulfolene Modifier	94
V-23	Effect of Feed Gas Composition on Separation for Silicone Polycarbonate Copolymer	95
V-24	Effect of Feed Gas Composition on Flux for Silicone Polycarbonate Copolymer	96

ABSTRACT

Vinylidene fluoride films modified with several different chemicals, and several commercially available films were tested for the separation of H_2S from H_2S-N_2 mixtures. Flux and separation factor values were obtained over a temperature range from 23°C to 125°C with an operating pressure of 500 psig.

Microscopic examination of the surfaces of modified vinylidene fluoride membranes indicated that uniform polymer films could be produced by allowing polymer solutions to stand for 15 days to insure complete dispersion of the polymer along with de-gassing the solution before pouring it onto a flat plate to form membrane films.

The following chemicals were added as modifiers to vinylidene fluoride: sulfolene, 3-methyl sulfolene, 1-methyl-2-pyrrolidinone, morpholine, monoethanolamine, triethanolamine, diisopropanolamine, and monoisopropanolamine. Good separation of H_2S from a 5% mixture of H_2S in N_2 was obtained using 3-methyl sulfolene, morpholene, monoisopropanolamine, and diisopropanolamine. For example, a film modified with 10% 3-methyl sulfolene gave a permeate containing 33% H_2S at 50°C.

The commercially available polymer films tested included: dimethyl silicone, silicone polycarbonate copolymer, poly vinyl fluoride, polyamide, heat stabilized polyamide, polysulfone and polyethersulfone. Very high flux values and good separation were found with several of these polymers.

Strong trends toward increasing flux with increasing temperature, and an increasing percentage of H_2S in the permeate gas with increasing temperature were observed.

Separation factor values for H_2S, determined using a 5% mixture of H_2S in N_2, ranged from less than .1 to 12.9. Flux values ranged from less than 10^{-5} $m^3(STP)/m^2$ hr to .727 $m^3(STP)/m^2hr$.

Tests conducted with a feed gas containing .27% H_2S in a H_2S/N_2 mixture showed that permeate flux decreased as the percentage of H_2S in the feed gas decreased. No definite trend in the change of separation factor with feed gas composition was observed.

INTRODUCTION AND PURPOSE

The separation of H_2S from other components in a gas stream is important in a number of areas, particularly in the utilization of the fossil fuels natural gas, petroleum, and coal.

Hydrogen sulfide gas is highly toxic, corrosive, and a catalyst poison. These properties necessitate its removal from gas streams.

Natural gas must be "sweetened", that is, hydrogen sulfide must be removed before it can be distributed by pipeline.

Hydrogen sulfide produced during refining from the sulfur present in crude oil is removed to prevent catalyst poisoning and corrosion.

When coal is gasified, regardless of the specific process used, most of the sulfur in the coal is converted to hydrogen sulfide. This hydrogen sulfide must be removed from the gasifier exit gas because it quickly destroys the activity of methanation catalysts.

As petroleum supplies become more scarce, coal gasification is expected to become a major industry. It has been estimated (1) that to produce clean fuel equivalent to 20% of current U. S. oil consumption from coal will require 80 gasification plants each producing 250 million ft^3/day of gas. Each plant would consume about 12,000 tons/day of high quality eastern coal and produce about 400 tons/day (8.4×10^6 SCF/day) of hydrogen sulfide.

Because most of the coal gasification processes currently under development operate to produce a product gas under pressure, the driving force for a membrane separation process is already present.

This is a big advantage of a membrane separation process over conventional liquid absorption hydrogen sulfide removal processes. Membrane separation processes also have the advantage of requiring much less equipment than liquid absorption processes.

In an attempt to contribute to the ultimate goal of a membrane separation system for hydrogen sulfide removal this work was conducted.

The specific objectives of this research were as follows:

1. To test a number of different plasticizers in vinylidene fluoride to determine permeation rate and selectivity for H_2S.
2. To test various commercially available polymeric films to determine permeation rate and selectivity for H_2S.
3. To determine the effect of temperature on selectivity for H_2S in the various membranes.
4. To determine the effect of temperature on permeation rate in the various membranes.
5. To determine the effect of feed gas composition on permeation rate and selectivity for H_2S for materials which appear promising.

REVIEW OF THE LITERATURE

Hydrogen sulfide removal technology includes a large number of commercial processes along with several recent laboratory developments. Much work has been done on membranes for gas separations, including some studies dealing with hydrogen sulfide.

A. COMMERCIAL PROCESSES FOR CONCENTRATING H_2S

The largest number of commercial processes for concentrating hydrogen sulfide gas involve absorption of H_2S into solution followed by a regeneration step which separates the H_2S from the absorbing solution.

Alkanolamine solutions are used as the absorbent in many processes. The Girbotal Process (2) and the Adip Process (3) use aqueous solutions of monoethanolamine, diethanolamine or triethanolamine as absorbents. The H_2S reacts with the amines to form compounds which may be broken down by heat. The reaction form is:

$$RNH_2 + H_2S \rightarrow RNH_3HS$$

The solutions are regenerated by being heated. This drives off the H_2S to form a concentrated H_2S stream and an amine solution which is recycled. The SNPA-DEA (4) Process uses a concentrated aqueous solution of diethanolamine as the solvent.

Two commercial processes have been developed which use an alkanolamine combined with other chemicals as the absorbent solution. In the Amisol Process (5) the solvent consists of methanol, an additive,

and an organic base (diethanolamine or triethanolamine). This solvent has the advantage of high loading capacity and a low regeneration temperature. The Sulfinol Process (6) makes use of an organic solvent, sulfolane (tetrahydrothiophene dioxide), mixed with an alkanolamine and water. Simultaneous chemical and physical absorption of H_2S takes place using this solvent.

An aqueous solution of the primary alkanolamine $HO-C_2H_4-O-C_2H_4-NH_2$ (trade named diglycolamine) is the solvent used in the Fluor Econamine Process (7).

A number of processes have been developed which use carbonate solutions for H_2S absorption. The most widely used process of this type is the Benfield Process (8). Hydrogen sulfide is removed by contact with a potassium carbonate solution containing Benfield additives at high pressure (100 - 2000 psig). The solution is regenerated by stripping at atmospheric pressure. A modification of the Benfield Process, known as the Hi-Pure Process (9) uses two different carbonate solutions in series. The advantage of this process is that it produces a product gas containing an extremely low concentration of H_2S (1-20 PPM). The Fluor Solvent Process (10) uses an anhydrous organic compound, propylene carbonate, for H_2S removal. This solvent is regenerated simply by pressure letdown of the rich solvent, without the application of heat.

Two processes are available which use a potassium salt solution

to absorb H_2S. In the Alkazid Process (11) two types of absorbents are used. Alkazid 'DIK' (potassium salt of dimethyl amino aciticacid) is used for the selective absorption of H_2S. Alkazid 'M' (potassium salt of methyl amino propionic acid) is used for simultaneous removal of CO_2 and H_2S. A potassium salt solution containing a stable catalyst is used for absorption of H_2S in the Catacarb Process (12).

Other commercial absorption processes include the Purisol Process, the Rectisol Process and the Selexol Solvent Process. Physical absorption of H_2S in N-methyl-pyrrolidone is used in the Purisol Process (13). The Rectisol Process (14) uses absorption in cooled methanol, and the Selexol Solvent Process (15) is based on the absorption of H_2S in dimethyl ether of polyethylene glycol.

B. COMMERCIAL PROCESSES FOR CONVERTING H_2S TO ELEMENTAL SULFUR

The most common method for converting H_2S to sulfur is the Claus Process (16). In this process, gas containing hydrogen sulfide is fed to a reaction furnace where it is burned with air. Part of the H_2S is oxidized to SO_2 which reacts with the remaining H_2S to form elemental sulfur according to the Claus reaction:

$$2H_2S + SO_2 \rightarrow 3S + 2H_2O$$

This process can only be used on a gas stream with a high concentration of H_2S (minimum H_2S concentration is about 15%). Therefore, Claus units are often used to treat the concentrated gas streams produced in liquid

absorption H_2S removal units.

The exit gas leaving a Claus unit contains more H_2S than recent environmental regulations allow (17). Therefore, a large number of add-on systems for removing the H_2S from Claus Process tail gas have been developed. The major tail gas cleanup systems are: the Beavon Process (18) which uses hydrogenation followed by treatment with sodium carbonate solution, the IFP Process (19) in which H_2S and SO_2 are reacted stiochiometrically to elemental sulfur, the SCOT Process (20) in which all sulfur compounds are catalytically converted to H_2S and then removed by absorption with an alkanolamine solution, the Sulfreen Process (21, 22) which uses an activated carbon or alumina catalyst to convert H_2S to elemental sulfur, the CBA Process (23) which also uses a catalytic process to convert H_2S to sulfur, the Trencor M Process (24) which uses a proprietary aqueous solution of methyldiethanolamine to absorb H_2S, and the Catabon Process (25) in which a complexed polyvalent metal ion oxidizes H_2S to sulfur.

In the Holmes-Stretford Process (26) H_2S is converted to elemental sulfur by being scrubbed with an alkaline solution containing a vanadium salt and an anthraquinone derivative. The H_2S is converted to elemental sulfur while the vanadium salt is reduced.

The Takahax Process (27) uses an alkaline sodium carbonate solution (pH = 8.5) containing 1,4-naphthoquinone, 2-sulfonate as a redox catalyst. Hydrogen sulfide reacts with sodium carbonate to

form sodium bisulfide and sodium bicarbonate. The bisulfide is oxidized by the catalyst to produce fine particles of solid sulfur.

The Konox Process (28) is based on the absorption of hydrogen sulfide with a strong iron oxide oxidizing agent. Sulfur is produced according to the following reaction:

$$4Na_2\overset{vi}{Fe}O_4 + 6H_2S \rightarrow 4Na\overset{iii}{Fe}O_2 + 4NaOH + 4H_2O + 6S$$

An alkali arsenates and arsenites solution is used to scrub H_2S from feed gas in the Giammarco Vetrocoke Process (29). Sodium thioarsenite is produced in the absorption step. The thioarsenite is converted to monothioarsenate in an oxidizing column. An air-blown oxidizing column is used to decompose the monothioarsenate to elemental sulfur and arsenite.

The Sulfox Process (30) uses an aqueous ammonia solution to scrub H_2S from the feed gas stream. The rich solution is warmed, mixed with air and passed over a catalyst which directs the oxidation of the mixture to yield mostly sulfur, according to the reaction:

$$NH_4HS + 1/2O_2 \rightarrow S + H_2O + NH_3.$$

The sulfur forms a separate molten phase which is withdrawn as product.

C. LABORATORY SCALE H_2S REMOVAL PROCESSES

Phillips Petroleum Company has tested molecular sieves for H_2S

removal (31). In a molecular sieve desulfurizer H_2S is adsorbed and a simultaneous rate-limited, adsorbent-catalyzed reaction of H_2S with any available CO_2 to form carbonyl sulfide occurs. The reversible reaction involved is:

$$H_2S + CO_2 \rightleftarrows COS + H_2O$$

When carbonyl sulfide appears in the exit gas, the molecular sieve unit must be regenerated. Five commercially available molecular sieves were tested using feed gas containing 30-160 PPM H_2S. The sieve which gave the best results had a true H_2S loading of .88 lb H_2S/lb sieve.

Adsorption of H_2S on solid surfaces has been studied by a number of investigators. Activated carbon acts as a catalyst as well as an adsorbent (32). In the presence of free oxygen H_2S is catalyzed to elemental sulfur according to the following reaction:

$$H_2S + 1/2\ O_2 \xrightarrow{\text{active carbon}} H_2O + S$$

Adsorption of H_2S on manganese dioxide and activated carbon has been studied at the University of Illinois (33). Several activated carbons were tested along with manganese dioxide impregnated on sawdust. Both the efficiency and capacity of the MNO_2-sawdust were found to be better than those of any of the activated carbons tested. Adsorption of hydrogen sulfide on Amberlyst A26 ion exchange resin has been studied (34). Rate curves and sorption isotherms were determined for this

system.

Removal of H_2S using an organic solution which converts the H_2S to crystalline sulfur has been studied at the University of New Brunswick (35). It was found that the best liquid phase system consisted of a mixture of 83 volume percent ethylene glycol monoethyl ether (Cellosolve), 15% water and, 2% dibutylamine. The water was found to act as a catalyst, since no reaction occurred in water-free mixtures. The dibutylamine allowed nucleation to proceed to produce granular sulfur.

The U. S. Bureau of Mines has developed three sintered materials capable of removing H_2S from producer gas at 1000°F to 1500°F (36). The absorbents are mixtures of ferric oxide and flyash, ferric oxide and pumice stone, and red mud (a ferric oxide - containing residue from bauxite processing). Red mud has the greatest capacity, absorbing 16 weight percent sulfur at 1000°F, 24% at 1250°F and 45.1% at 1500°F.

A number of H_2S removal processes have recently been patented. U. S. 3,502,428 (37) covers H_2S removal with N-methylethanolamine in 2,2dimethyl-1,3-dioxolane-4-methanol. U. S. 3,716,620 (38) describes a process for purifying a gas containing H_2S or a mercaptan, wherein the gas is contacted with a solution of iodine and an amine in an organic solvent. Removal of acid gases from mixtures by washing with N-substituted ε-caprolactams is described in U. S. 3,653,809 (39). U. S. 3,409,520 (40) describes an electrolysis process for removing

H_2S from a hydrocarbon gas mixture.

D. USE OF MEMBRANES FOR GAS SEPARATIONS

A large number of membrane systems have been developed for gas separations. In order to effect a separation the membrane material allows one component of a mixture to permeate at a greater rate than the others. The source of membrane selectivity is usually either preferential solubility of the desired component or a lower resistance to transfer for one component than for others, or both (41).

A commercial installation for the recovery of hydrogen from a refinery gas mixture using hollow fibers of dacron polyester has been in operation since 1969 (42).

The use of a membrane systems to separate helium from natural gas has received considerable attention. Stern et. al. (43) studied a large number of polymer materials with helium, nitrogen, and methane mixtures. Separation factors for $He-N_2$ and $He-CH_4$ systems were reported for 16 polymers including silicone rubber, teflon FEP, polystyrene, polyvinyl chloride, polyethylene, polyvinyl fluoride, mylar and saran. Large scale tests have also been conducted on the use of cellulose acetate films for the separation of helium from natural gas (44).

The separation of oxygen from air using an ethyl cellulose film has been studied (45). In a one-stage process oxygen could be enriched to 32.6%.

Laboratory scale separation information has been reported for a large number of polymer systems. Brubaker and Kammermeyer (46) presented data for polyethylene with four gas systems ($He-O_2$, $CO_2-H_2-O_2-N_2$, $SO_2-O_2-N_2$, $NH_3-H_2-N_2$), Trifluoromonochloroethylene with two gas systems ($CO_2-H_2-O_2-N_2$, $NH_3-H_2-N_2$) and cellulose acetate butyrate with one gas system ($CO_2-H_2-O_2-N_2$). McCandless (47) tested four polymer materials (caprolactam, dacron, parylene C poly (monochloro-para-xylylene) and polyimide) with a binary gas system of carbon monoxide and hydrogen.

Tajar and Miller (48) reported data for the permeation of CO_2, O_2 and N_2 in a four component membrane system composed of polyethylenimine, polyvinylbutyral, epoxy and water. This membrane system was found to be quite selective for CO_2 over O_2 and N_2. Permeability coefficient ratios on the order of 30:1 or greater were reported.

Modified vinylidene fluoride membranes have been used in two studies. Seibel and McCandless (49) used vinylidene fluoride modified with sulfolane for the separation of SO_2 from N_2. Separation factors ranging from 30 to 100 were obtained. Zavaleta (50) studied a number of chemical modifiers for vinylidene fluoride in order to effect the separation of SO_2 from N_2. The modifiers tested included: sulfolene, 3-methyl sulfolene, p-amino sulfolene, phenyl sulfone, 4,4-sulfonyl diphenol, and tetrahydro-3-thiophenamine 1,1-dioxide. Membranes containing 18 weight percent sulfolene gave the best results. Membranes

of this composition allowed a permeate stream containing 95.5 volume percent SO_2 to be obtained from a feed stream containing 5.6% SO_2.

E. MEMBRANES FOR SEPARATING H_2S FROM GAS MIXTURES

There is some information in the literature concerning membrane separations of H_2S. U. S. 3,819,806 (51) has been awarded to Ward, Salemme and Mayer for an immobilized liquid membrane which is used to separate H_2S from a gas mixture. The dissociation of H_2S in water proceeds according to the following reaction:

$$H_2S \rightleftarrows H^+ + HS^-$$

By forming an immobilized liquid membrane from an aqueous solution containing specific anions, the acid to HS^- transfer so provided greatly increases the transport of H_2S across the membrane from the value expected based on diffusivity and solubility.

A recent paper presented by Matson and Kimura (52) discussed highly permeable and selective polymeric membranes for H_2S removal which are based on the principle of facilitated transport. Chemical reaction augments the diffusion process through the following reaction:

$$H_2S + CO_3^{=} \rightleftarrows HS^- + HCO_3^-$$

Robb (53) reported the permeabilities of a number of gases, including hydrogen sulfide, in a dimethyl-silicone rubber consisting of dimethyl

siloxane plus 33% by weight silica filler. The permeability of H_2S in the film was significantly greater than that of the atmospheric gases nitrogen and oxygen. The value of the permeability constant for H_2S is 1000×10^{-9} ccgas (RTP) cm/sec $cm^2 cmHg \Delta P$ compared to 28×10^{-9} ccgas (RTP)cm/sec $cm^2 cmHg \Delta P$ for nitrogen and 6×10^{-9} ccgas(RTP)cm/sec $cm^2 cmHg \Delta P$ for oxygen (RTP indicates room temperature and pressure).

Dimethyl silicone membranes which have much greater permeability to H_2S than atmospheric gases have been developed by General Electric (54). Permeability of H_2S is reported as 840×10^{-9} ccgas(RTP)cm/sec $cm^2 cmHg \Delta P$ compared to 25×10^{-9} ccgas (RTP)cm/sec $cm^2 cmHg \Delta P$ for nitrogen and 50×10^{-9} ccgas (RTP) cm/sec $cm^2 cmHg \Delta P$ for oxygen.

The permeability of several commercial films to hydrogen sulfide gas was studied by Heilman, et. al (55). The films tested included Nylon 6 polyamide, cellulose acetate, rubber hydrochloride, cellulose, polyethylene, poly vinyl butyral, polyvinyl trifluoroacetate, mylar, polyvinylidene chloride and ethylcellulose.

THEORETICAL BACKGROUND

A. NATURE OF THE TRANSPORT PROCESS

The permeation of a gaseous mixture through a polymeric material involves three transport stages (Figure III-1).

These stages are:

(1) Transport from the gas mixture to the membrane surface.

(2) Transport through the membrane.

(3) Transport from the membrane to the permeate stream.

B. TRANSPORT THROUGH A GASEOUS FILM

In gas-phase permeation, transport to the membrane surface and from the membrane surface provides negligible resistance compared to that of transport through the membrane (56). The concentration gradient between the high pressure side of the membrane and the bulk gas can be greatly reduced by maintaining a high gas flow rate across the high pressure side of the membrane, as was done in this study.

C. TRANSPORT THROUGH A POLYMERIC MEMBRANE

The basic equation describing membrane diffusion transport at steady state is (57):

$$N_a = - D \frac{\partial C_a}{\partial Z} - \frac{D}{2C_m} \frac{\partial^2 C_a}{\partial Z^2} \qquad (1)$$

This equation differs from the Fick's first law equation by addition of the second term due to the presence of the membrane. In

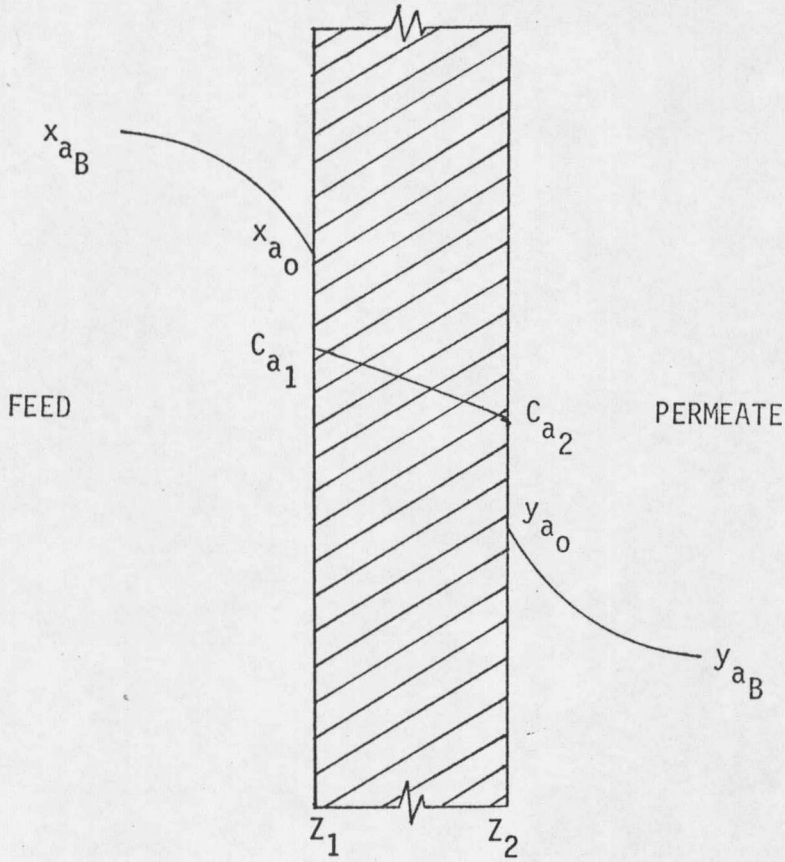

FIGURE III-1. CONCENTRATION PROFILES OF COMPONENT a IN THE MEMBRANE AND ITS VICINITY

gaseous diffusion the second term is usually negligible (58). Neglecting this term yields

$$N_a = - D \frac{\partial C_a}{\partial Z} \tag{2}$$

which is the mathematical expression of Fick's first law for steady state diffusion.

Since the concentration is a function only of distance through the membrane, whole derivatives can be used.

$$N_a = -D \frac{dC_a}{dZ} \tag{3}$$

If an average value of the diffusivity is used, Equation 3 can be integrated subject to the following boundary conditions:

$$\begin{aligned} Z &= Z_1 \qquad & C_a &= C_{a1} \\ Z &= Z_2 \qquad & C_a &= C_{a2} \end{aligned} \tag{4}$$

to give

$$N_a \int_{Z_2}^{Z_1} dZ = -D \int_{C_{a2}}^{C_{a1}} dC_a \tag{5}$$

doing the integration results in the expression

$$-N_a(Z_1 - Z_2) = -D\,(C_{a1} - C_{a2}) \tag{6}$$

$(Z_2 - Z_1)$ represents the thickness of the membrane, L, so the following equations can be written:

$$-N_a = \frac{-D}{L}(C_{a_1} - C_{a_2}) \tag{7}$$

or

$$N_a = \frac{D}{L}(C_{a_1} - C_{a_2}) \tag{8}$$

The solubility of a gas in a polymer at equilibrium can be described by a Henry's Law expression, where the constant S represents the solubility of the gas in the polymer.

$$C_a = Sp_a \tag{9}$$

Since the permeation process is generally slow, the use of this equilibrium relationship between the concentration of sorbed gas and the partial pressure at the interface can be used.

Substituting the Henry's Law expression into equation 8 results in the expression:

$$N_a = \frac{D}{L}(S_1(p_{a_1})_o - S_2(p_{a_2})_o) \tag{10}$$

If solubility is assumed to be a function only of temperature, and both membrane surfaces are at the same temperature, then

$$S_1 = S_2 = S \tag{11}$$

and,

$$N_a = \frac{DS}{L}[(p_{a_1})_o - (p_{a_2})_o] \tag{12}$$

The partial pressures at the interfaces can be expressed in terms of the total pressures:

$$p_{a_1} = P_1 x_{a_1} \tag{13}$$

$$p_{a_2} = P_2 y_{a_2}$$

Making this substitution yields:

$$N_a = \frac{DS\ (P_1(x_{a_1})_o - P_2(y_{a_2})_o)}{L} \tag{14}$$

From this expression it is clearly seen that the flux of gas through a membrane is dependent on solubility and diffusivity of the gas in the membrane. One of the objectives of this research is to add plasticizers to polymeric membranes in order to increase solubility and thereby increase the flux of the desired component (H_2S).

D. POLYMER CHEMISTRY ASPECTS

Gases are transported through a polymeric nonporous membrane by means of diffusion. As can be seen from Equation 14 the process depends on the solubility of the penetrant in the membrane as well as the mobility of the penetrant molecule in the polymer matrix.

At a given moment a penetrant molecule can be visualized as occupying a vacant site existing between adjacent polymer chains. The penetrant proceeds, under the influence of a concentration gradient, from one position to another and eventually achieves a finite jump in

the direction imposed by the concentration gradient. The overall motion of a particle consists of a series of steps or diffusional jumps.

Gases are unable to permeate through crystalline regions of a polymer because polymer chains in these regions are tightly linked, leaving no vacant sites for gas molecules to move into. Crystalline regions have several other negative effects on the rate of gaseous diffusion through a polymer. The three principle effects are: the reduction in the available polymer volume for diffusion, the tortuosity involved in by-passing crystalline areas, and the decrease in the mobility of amorphous chain segments as a result of the presence of crystalline regions which may act as crosslinks.

At the glass transition temperature of a polymer there is a change in physical properties of the polymer. Above the glass transition temperature there is increased molecular freedom. That is, molecular chain segments are free to vibrate and twist. Movement of penetrant molecules through the polymer is much easier above the glass transition temperature.

The addition of plasticizers or modifiers to a polymer has several effects. Plasticizers increase the diffusivity of a given gas or vapor. The increase is attributed to the increase in polymer segmental mobility as a result of lower cohesive forces between chains (59). Modifiers also lower the glass transition temperature by allowing for increased mobility of polymer chain segments. Solubility of gases or

vapors may also be greatly increased by the addition of modifiers, particularly when the gas or vapor is soluble in the modifier. The net effect of modifier addition is a marked increase in the gas permeation rate.

E. TEMPERATURE EFFECTS

As can be seen from Equation 14:

$$N_a = \frac{DS(P_1(x_{a_1})_o - P_2(y_{a_2})_o)}{L}$$

the effect of temperature on permeation flux will depend primarily on the manner in which diffusivity (D) and solubility (S) depend on temperature if the operating pressures remain constant.

The temperature dependence of diffusivity conforms with an Arrhenius-type relationship (60),

$$D = D^o e^{-E/RT} \tag{15}$$

By measuring diffusivities at several temperatures an Arrhenius plot of lnD vs 1/T yields the activation energy for diffusion of the penetrant in the polymer (61).

It is clear, then, that increasing the temperature of a permeation system will cause the diffusivity to increase exponentially with absolute temperature.

For sorption of gases into solid polymer systems, solubility also follows an Arrhenius-type relationship (62),

$$S = S^{o} e^{-\Delta h/RT} \tag{16}$$

where Δh is the apparent heat of solution. Another means of expressing this dependence on temperature is in terms of the Henry's Law constant (63),

$$H = H^{o} e^{-\Delta h/RT} \tag{17}$$

Thus, increasing temperature increases gas solubility in an unmodified polymer film.

However, for modified films to which liquid modifiers have been added, the temperature effect on solubility is more complicated.

The solubility of gases in liquid modifiers usually decreases as temperature is increased. Since the gases are much more soluble in the modifier than in the base polymer, it is possible that this effect outweighs the increased solubility of gases in the polymer. Therefore, flux could actually decrease with increasing temperature.

For a modified polymer film, diffusivity increases as temperature increases, while the solubility term is acted on by opposing effects.

For unmodified films, diffusivity increases as temperature increases and the solubil ty of the gases in the polymer also increases.

However, studies wit polyethylene (64) have shown that both solubility and diffusivity re dependent on crystallinity. Solubility was found to be directly proportional to the volume percent amorphous material present. It is reasonable to assume that this crystallinity

dependence will be true for other systems including the films tested in this research. Therefore, differences between the temperature-permeate flux relationship for different films may be due to differences in crystallinity.

Because different gases have different values of activation energy for diffusion and heat of solution, the values of diffusivity and solubility constants will change at different rates with temperature. Therefore, a change in temperature will change the composition of the permeate gas.

F. DEFINITION OF THE SEPARATION FACTOR

The local separation factor α_a of component a in a gaseous mixture is defined as:

$$\alpha_a = \frac{y_a/(1-y_a)}{x_a/(1-x_a)} \tag{17}$$

If perfect mixing can be assumed, the local separation factor α_a has a constant value for any point in the membrane and is identical to the overall separation factor α.

The separation factor, which is analogous to the "relative volatility" in distillation, gives an idea of the selectivity of a membrane with respect to a component of a gaseous mixture. The higher the separation factor, the higher the selectivity for the desired component.

EXPERIMENTAL EQUIPMENT, MATERIALS, AND PROCEDURES

A. DESCRIPTION OF EQUIPMENT

The arrangement of the experimental equipment used in this permeation study is shown schematically in Figure IV-1. The equipment consists of the following parts: the permeation cell, a constant temperature enclosure and temperature measuring instruments, gas mixture storage and feeding equipment, purge gas system components, permeate rate measurement equipment, gas composition analysis equipment, and equipment for analyzing the surface and composition of membranes.

A description of the individual components follows:

(1) Permeation Cell

A diagram of the permeation cell is shown in Figure IV-2. It is fabricated from two stainless steel blank flanges which are 5/8 inch thick and 4.5 inches in diameter. A cavity is machined into each flange. On the high pressure side the cavity allows feed gas to circulate and move across the membrane surface. On the permeate side a porous stainless steel disk covered with filter paper is placed in the cavity to support the membrane. The membrane is sealed between two teflon gaskets and the permeation cell is clamped shut by eight equally-spaced bolts. The gasket openings, which determine the exposed membrane surface, have an area of 20.3 cm^2. The cell has a tubular thermocouple well on the high pressure side.

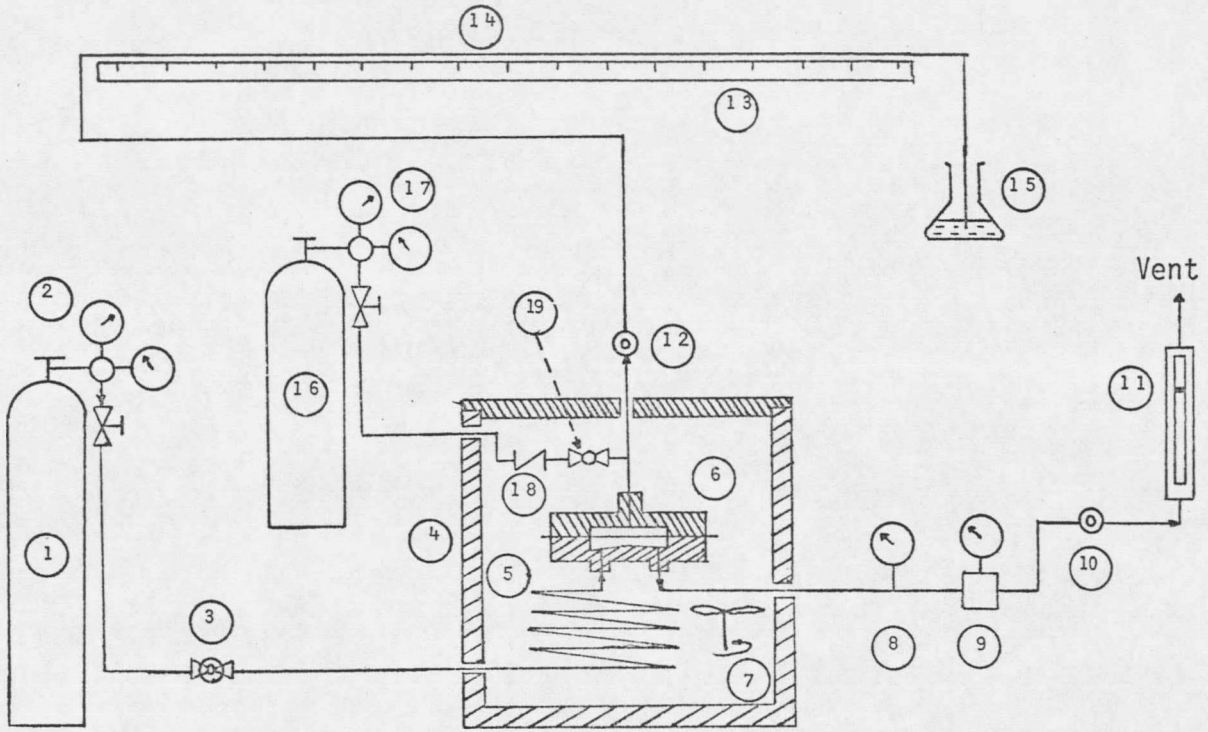

(1) Feed Gas Cylinder (2) Pressure Regulator (3) Metering Needle Valve (4) Constant Temperature Enclosure (5) Tubing Coil (6) Permeation Cell (7) High Speed Fan (8) Pressure Gauge (9) Back Pressure Regulator (10) Sampling Septum (Vent Gas) (11) Rotameter (12) Sampling Septum (Permeate) (13) Length Measurement (14) Calibrated Teflon Tube (15) Oil Seal (16) Purge Gas Cylinder (17) Low Pressure Regulator (18) Check Valve (19) Block Valve

FIGURE IV-1. SIMPLIFIED DIAGRAM OF PERMEATION EQUIPMENT

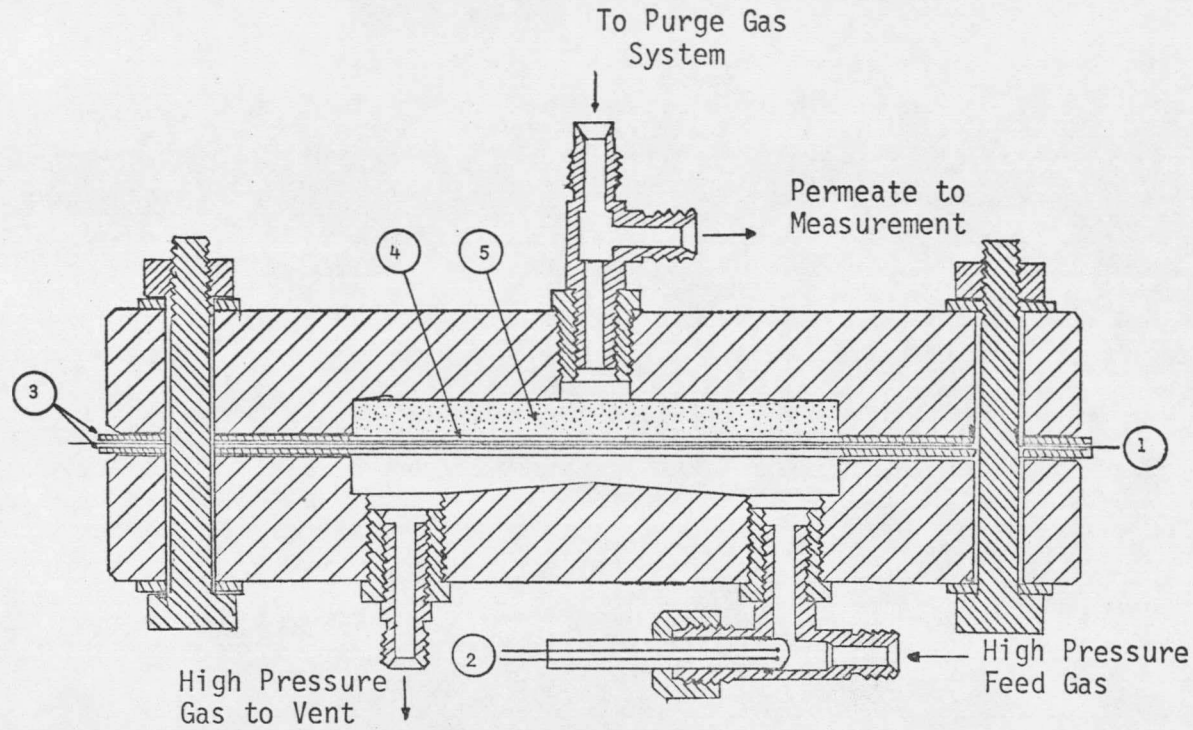

(1) Membrane (2) Thermistor and Thermocouple (3) Gaskets

(4) Filter Paper (5) Porous Stainless Steel Disk

FIGURE IV-2. PERMEATION CELL DIAGRAM

(2) Constant Temperature Enclosure and Temperature Measuring Equipment

The constant temperature enclosure is constructed from a section of 18 inch diameter asbestos pipe 12 inches high. The pipe wall thickness is 3/4 inch. The bottom of the enclosure is sealed with a 1/4 inch asbestos board, and the bottom and sides of the enclosure are lined with 3/4 inch thick fiberglass insulation. The lid of the enclosure consists of 3/4 inch insulation sandwiched between 1/4 inch asbestos boards. To insure a tight seal the insulation and lower board have a diameter equal to the inner diameter of the enclosure while the top asbestos board has a diameter equal to the outer diameter of the constant temperature enclosure. Gas lines enter the enclosure through grooves cut in the top surface of the asbestos pipe section. Two 1/4 inch holes are cut in the top of the enclosure. A thermometer is placed in one, and the other provides access to a silicone rubber septum which allows samples of the permeate gas to be taken without disturbing the constant temperature enclosure. The permeate line leaves the enclosure through a 1/4 inch hole in the side of the enclosure.

For runs above room temperature, heat is provided by two 500 watt heaters placed in the bottom of the enclosure. The heaters are covered with a piece of asbestos board to shield the permeation cell and feed lines from direct exposure to the heaters. The input current to one of the heaters is controlled by a Powerstat (The Superior Electric Company) variable transformer, while the input to the other heater is

controlled by a Thermistemp Model 63 thermistor temperature controller (Yellow Springs Instrument Company) through another Powerstat variable transformer. The system is diagrammed in Figure IV-3. The thermistor probe and an iron-constantan thermocouple for temperature measurement are mounted in the thermowell section of a tee located at the gas inlet to the high pressure side of the permeation cell. The thermocouple is connected to a Speedomax Type G (Leeds and Northrup) chart recorder. A high speed 24 watt fan (Pamotor Model 4500) is mounted on the asbestos baffle to circulate air and insure uniform temperature in the enclosure. A mercury thermometer is used to determine the temperature of the air inside the enclosure.

(3) Gas Mixture Storage and Feed Equipment

The feed gas mixtures are stored in 285 ft^3 (STP) size gas cylinders (National Cylinder Gas Division of Chemetron Corporation). Flow is controlled using a Matheson Model B16 corrosion-resistant pressure regulator. The regulator pressure is set just above the desired operating pressure. A Grove Mighty Mite back pressure regulator located downstream of the membrane test cell is used to set the operating pressure. Operating pressure is checked using a Matheson Company pressure gauge located just upstream of the back pressure regulator. Gas flow rate is determined using a calibrated rotameter (Fischer and Porter Company) placed after the back pressure regulator

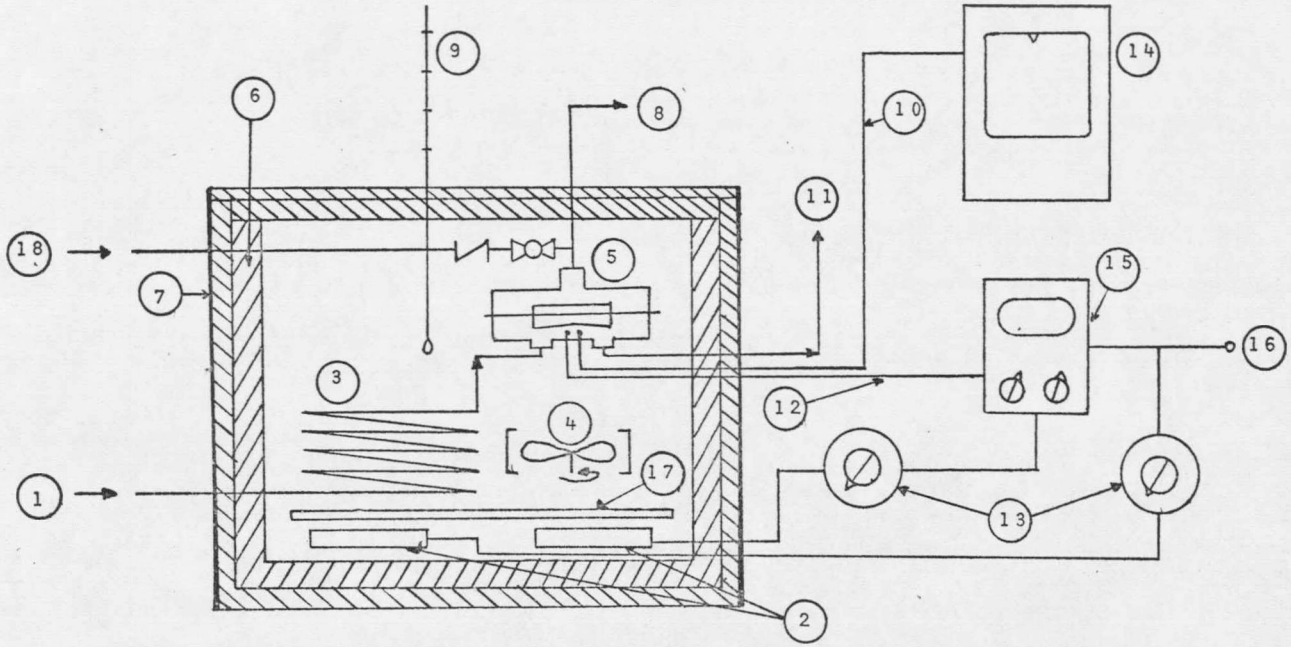

(1) Feed Gas (2) Heaters (3) Heat Exchange Coil (4) Fan (5) Permeation Cell (6) Thermal Insulation (7) Constant Temperature Enclosure (8) Permeate (9) Thermometer (10) Thermocouple Probe (11) Exhaust Gas (12) Thermistor Probe (13) Variable Transformers (14) Temperature Recorder (15) Thermistemp Temperature Controller (16) Power Supply (17) Asbestos Baffle (18) Purge Gas

FIGURE IV-3. CONSTANT TEMPERATURE ENCLOSURE -- HIGH TEMPERATURE

and is set using a Whitey micro-metering valve with a vernier handle. To insure uniform gas temperature, a 60 foot coil of 1/8 inch stainless steel tubing is connected into the feed line just upstream of the membrane surface. All tubing in the feed system is 1/8 inch stainless steel.

(4) Purge Gas System Components

To remove all nitrogen from the permeate line, and thereby increase the accuracy of permeate composition measurements, a purge gas system is used. The purge gas system is shown in Figure IV-1. It includes a gas cylinder (Matheson Company) equipped with a Matheson pressure regulator and a metering valve. Purge gas is fed from the cylinder through a check valve, a block valve, and then into the permeate line. Both helium and carbon dioxide are used as purge gases.

(5) Permeate Rate Measurement Equipment

The rate of permeation is determined by timing the movement of a column of pump oil (VanWaters & Rogers) inside a calibrated 4 foot section of teflon tubing (Chemplast Inc. Chemfluor Special FEP Tubing). The tubing is calibrated by determining the weight of water required to fill a given length of tubing. The volume per unit length of the tubing has been determined to be .034 cc/cm. The oil is moved into reading position by drawing gas out of the permeate line through a silicone rubber septum with a .5 cc gas syringe.

(6) Gas Composition Analysis Equipment

Gas samples are taken through silicone rubber septums placed in the feed and permeate lines using a .5cc "pressure-lok" syringe (Precision Sampling Corporation).

Samples are analyzed using a Varian Aerograph Series 1400 thermal conductivity gas chromatograph coupled with a Sargent Model SR chart recorder. The chromatograph column is a 6 foot section of 1/8 inch stainless steel tubing packed with Porapak Q-S packing (Waters Associates, Inc.).

The following operating conditions are used:

Column Temperature - 115°C
Detector Temperature - 110°C
Carrier Gas Flow - 17.6 ml/min
Detector Current - 150 milliamperes
Carrier Gas - Helium

The chromatograph is calibrated using different volumes of pure nitrogen and hydrogen sulfide.

It has been found (65) that for this system duplicate analyses of gas samples of known compositions are accurate to about ±1% of the absolute amount present.

(7) Membrane Surface and Composition Analysis Equipment

A Carl Zeiss multi-ocular light microscope is used to examine the surfaces of all vinylidene fluoride membranes for holes or other defects. The microscope allows magnifications of 40x, 100x, 200x and 400x to be

used.

Many of the modified vinylidene fluoride membranes have been examined using a scanning electron microscope (I.S.I. Model SMS 2-2 "Super II", manufactured by International Scientific Instruments, Inc.). The electron microscope gives clearer images and allows higher magnification to be used. Also, photographs are made through the electron microscope to provide a record of the surface characteristics observed.

To check for the presence of residual dimethylformamide solvent in the vinylidene fluoride membranes, samples of a membrane made with no modifier are tested using an infrared spectrophotometer (Beckman Instruments Model IR5A). Membrane samples are mounted in stiff paper holders for testing.

B. MATERIALS

The following is a list of the materials used in this research:

1. Vinylidene Fluoride - used as the base polymer for many of the membranes tested in this study. Vinylidene fluoride resin is commercially available under the tradename of Kynar, Grade 301 from Pennwalt Corporation. No antioxidants are used in the resin.

2. Dimethylformamide - used as a solvent for vinylidene fluoride and the modifier to form a solution from which membranes are cast. Baker grade dimethylformamide was purchased from J. T. Baker Chemical

Company.

3. Sulfolene - purchased from Phillips Petroleum Company in 1 lb. containers.

4. 1-Methyl-2-Pyrrolidinone - purchased from J. T. Baker Chemical Company in 500 g bottles.

5. Monoethanolamine - obtained from Union Carbide Corporation in 32 fluid ounce containers.

6. Triethanolamine - obtained from Union Carbide Corporation in 8 fluid ounce bottles.

7. 3-Methyl Sulfolene - purchased from Phillips Petroleum Company in 1 lb containers.

8. Monoisopropanolamine - obtained from Union Carbide Corporation in 8 fluid ounce containers.

9. Diisopropanolamine - obtained from Union Carbide Corporation in 8 fluid ounce containers.

10. Morpholine - obtained from Union Carbide Corporation in 8 fluid ounce containers.

11. Hydrogen Sulfide - purified grade, purchased from the Matheson Company in cylinders containing 22 pounds.

12. Nitrogen - laboratory grade, purchased from Chemetron Corporation in cylinders containing 285 cubic feet (STP).

13. Helium - laboratory grade, purchased from Chemetron Corporation in cylinders containing 285 cubic feet (STP).

14. Carbon Dioxide - industrial grade, purchased from Chemetron Corporation in cylinders with a net weight of 20 pounds.

15. Polysulfone film - compound P-1700 polysulfone film (.002 inch thick) was obtained from Union Carbide Corporation.

16. Dimethyl Silicone film - unbacked film was purchased from General Electric Corporation in standard 1 foot by 1 foot squares with a thickness of 1 mil.

17. Silicone Polycarbonate Copolymer film - tradenamed MEM-213, this film was purchased from General Electric Corporation in standard 1 foot by 1 foot squares with a thickness of 1 mil.

18. Polyamide film - two different types of this film, tradenamed Capran, were obtained from Allied Chemical Corporation. Capran 77C sheets 1 mil thick were tested at low temperatures. Heat stabilized Capran 80 film 1 mil thick was tested at higher temperatures.

19. Polyethersulfone film - was obtained from I.C.I. United States, Inc. in sheets having a thickness of 2 mil.

20. Poly Vinyl Fluoride film - DuPont "Tedlar" film number 100AG30UT was obtained in 8-1/2 inch by 11 inch sheets .001 inch thick.

21. Filter Paper - Whatman qualitative number 5.

22. Masking tape - Highland brand utility grade tape was purchased in rolls 3/4 inch wide x 60 yards.

23. Rate Measuring Fluid - pump oil from Van Waters & Rogers Company, Catalog Number 54996.

C. EXPERIMENTAL PROCEDURE

(1) Preparation of Gas Mixtures

The gas mixtures of H_2S-N_2 are prepared as follows:

A gas cylinder is evacuated using a vacuum pump. The cylinder is pressured up with H_2S to the required pressure.

Nitrogen is then added until the chosen final pressure is reached. The cylinder is then placed close to a heater for one week to insure that complete mixing will take place. The mixtures are found to be very uniform in composition based on periodic analysis with the calibrated gas chromatograph.

(2) Calibration of Gas Chromatograph

The Porapak Q-S column used for analysis of H_2S/N_2 mixtures is calibrated using different volume samples of pure hydrogen sulfide and nitrogen. The samples are taken with a .5 cc "pressure-lok" syringe (Precision Sampling Corporation) through a silicone rubber septum mounted on a low pressure regulator at 10 psig. Samples are analyzed using a Varian Aerograph Model 1400 low volume thermal conductivity gas chromatograph coupled with a Sargent Model SR chart recorder. The sample tests are repeated several times to insure reproducibility, which was found to be very good. The H_2S and N_2 peaks recorded on the recorder chart paper are then copied on a Xerox copier using standard copying paper (4024 dual purpose white) and the

resulting peaks are cut out and their weight determined using a Mettler precision balance (sensitivity to 1×10^{-4} grams). Figure IV-4 shows this calibration data as a function of the product peak weight x chromatograph attenuation. The chromatograph response is quite linear. Weight x attenuation values are determined for both components in H_2S mixtures ranging from 0 to 100% H_2S at 5% intervals using the data on Figure IV-4. For example, for 10% H_2S, the weight x attenuation for .05 cc H_2S and .45 cc N_2 are determined from the graph. Area percent H_2S is then correlated with volume percent H_2S by calculating the value of H_2S weight x attenuation divided by the total weight x attenuation value. The resulting calibration curve is shown in Figure IV-5.

(3) Calibration of Exhaust Gas Rotameter

The rotameter is calibrated using a wet test meter at room temperature (23°C). Corrections are made to account for the increase in humidity of the gas. The calibration curve is shown in Figure IV-6, together with the experimental data used in its determination.

(4) Membrane Manufacture

The two main steps in membrane manufacturing are formation of the membrane solution and casting of the solution to form a film.

The membrane solution is formed as follows:

A pyrex beaker is carefully cleaned and weighed on a Mettler

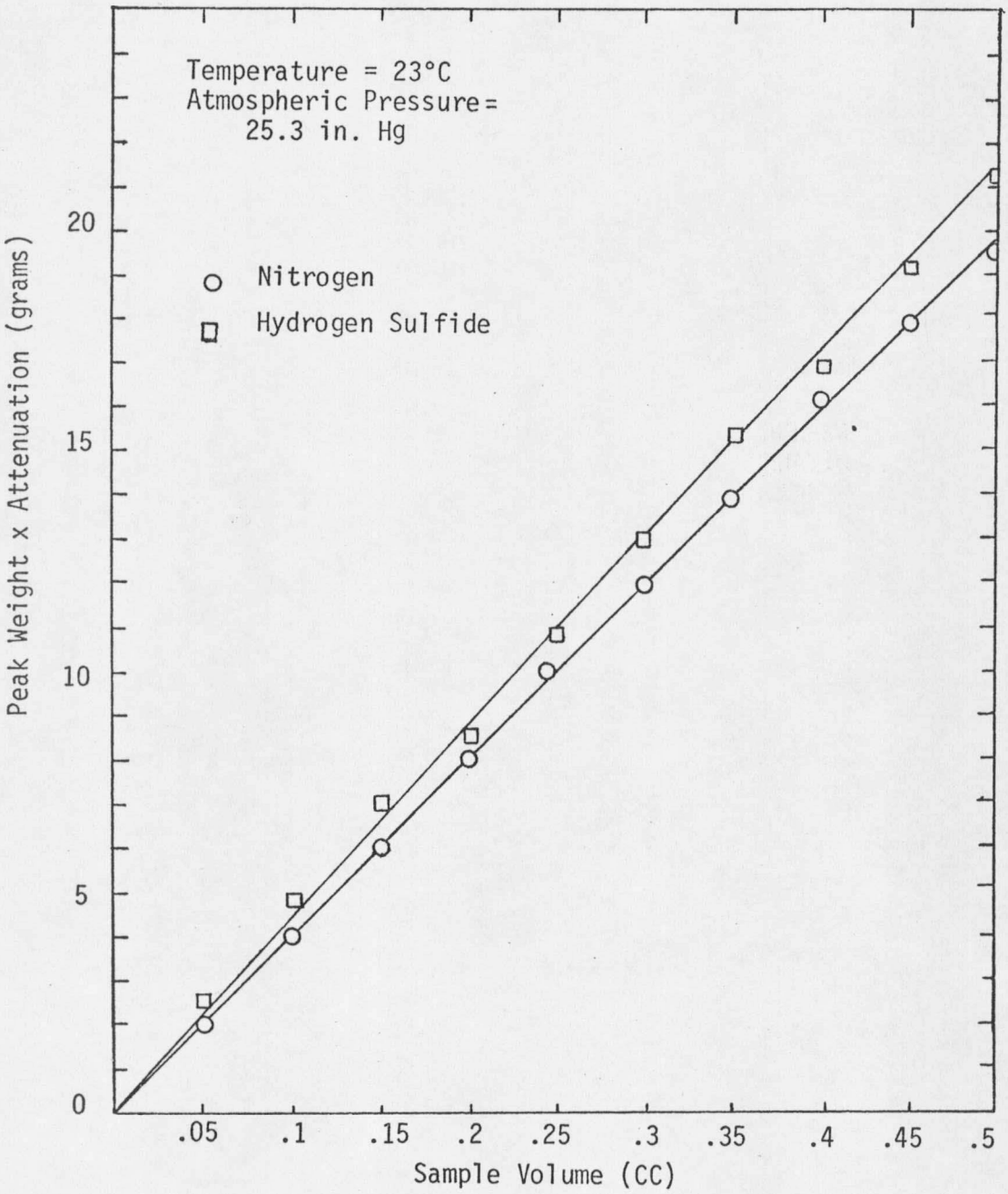

FIGURE IV-4. CALIBRATION OF GAS CHROMATOGRAPH-SAMPLE VOLUME vs. PEAK WEIGHT x ATTENUATION FOR NITROGEN AND HYDROGEN SULFIDE

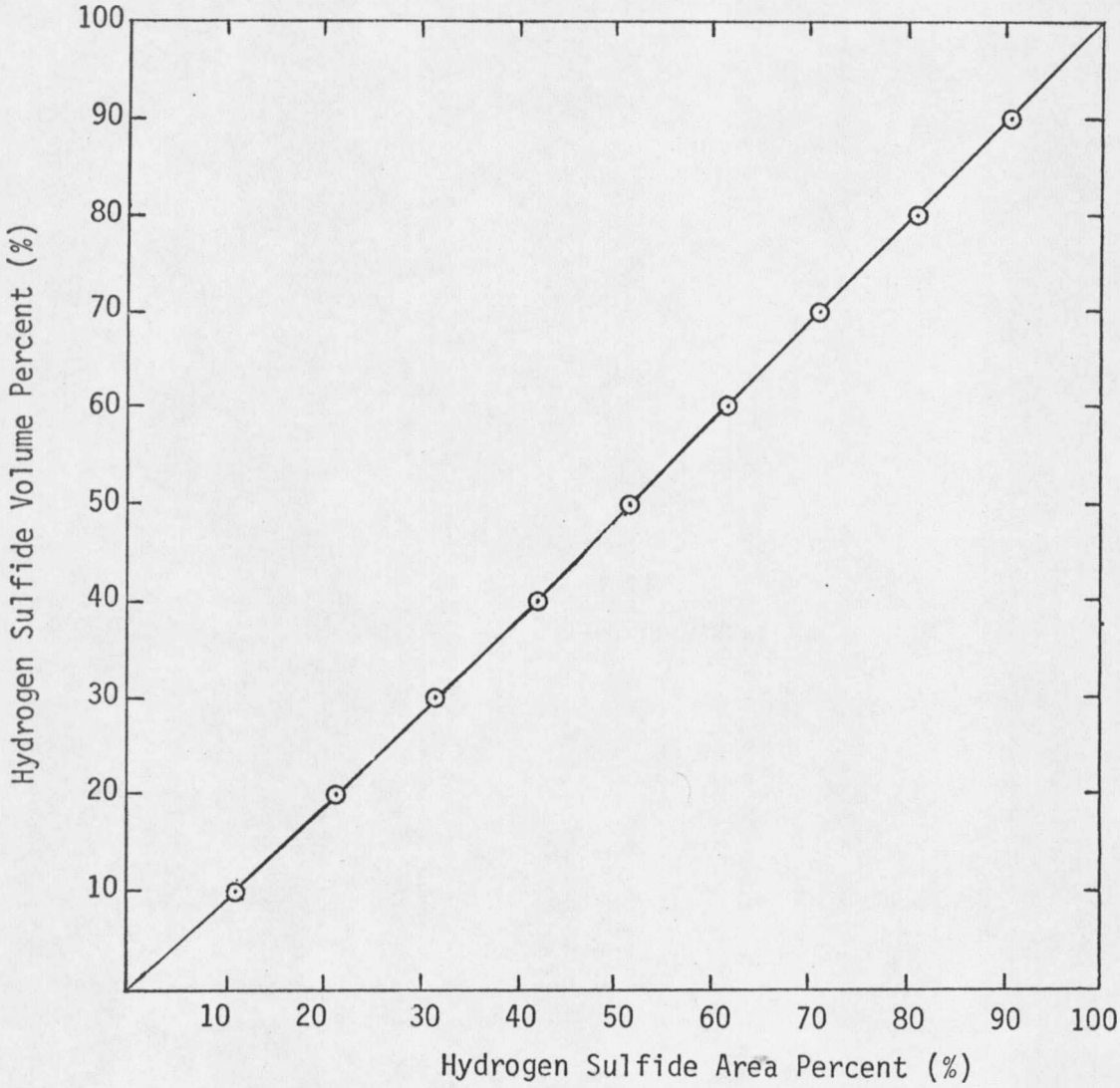

FIGURE IV-5. CALIBRATION CURVE FOR GAS CHROMATOGRAPH - AREA PERCENT OF H_2S vs. VOLUME PERCENT OF H_2S

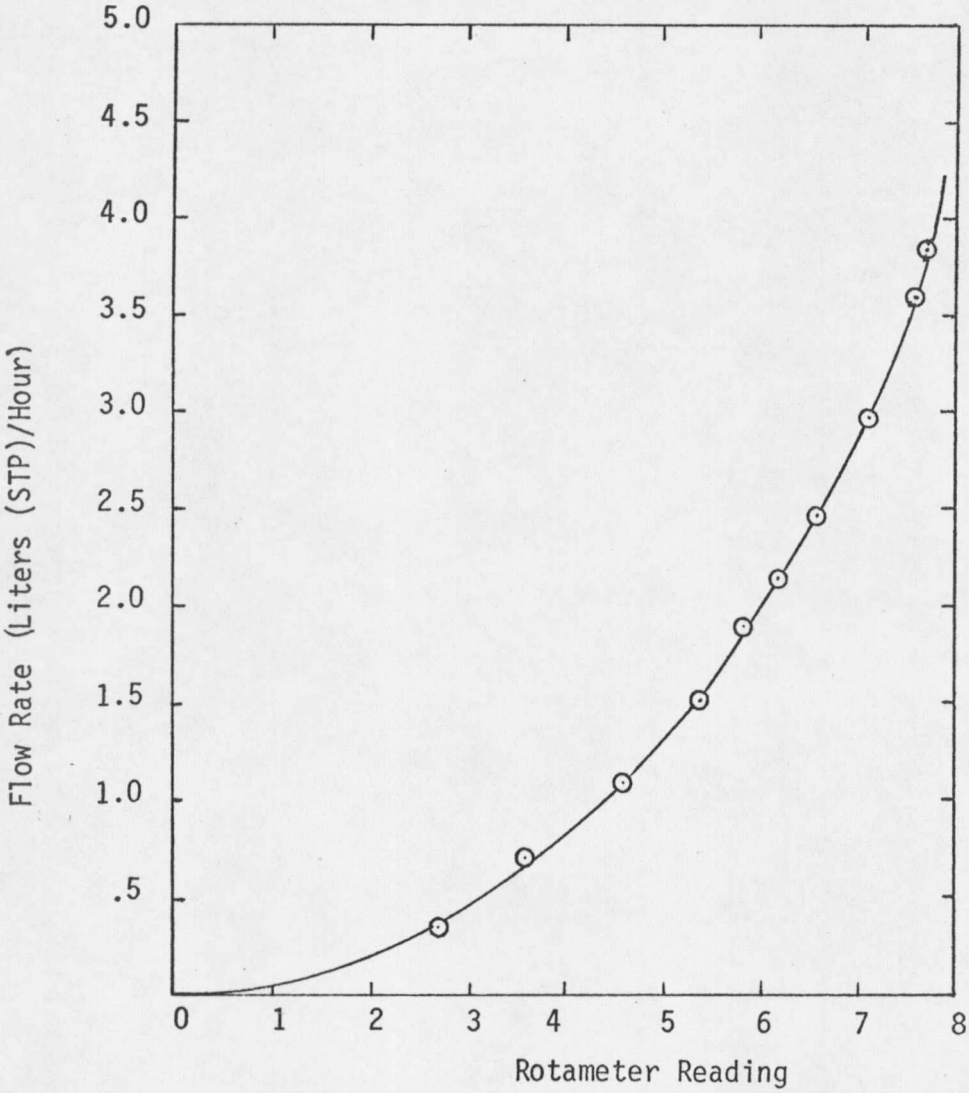

FIGURE IV-6. ROTAMETER CALIBRATION CURVE-FLOW RATE (STP) vs. ROTAMETER READING

balance (sensitivity 1×10^{-3}g). The membrane modifier is then weighed into the beaker. The appropriate amount of vinylidene fluoride is then weighed out on weighing paper and added to the beaker. The composition of the membrane on a solvent-free basis is determined by the relative amounts of vinylidene fluoride and modifier added to the beaker. Dimethylformamide solvent is added in the ratio of 5.7 cc dimethylformamide per gram of vinylidene fluoride. The mixture is stirred with a chemical spatula for about ten minutes. Then, the beaker is tightly covered with polyethylene film and placed on a hot-plate set for low heat until complete dissolution is achieved. The covered mixture is then allowed to stand at room temperature for a period with occasional stirring to insure complete solution of the polymer in the solvent. This period is 15 days for the membranes whose test results are presented in this thesis.

The 15 day solution period was found to be necessary based on the results of microscopic examination of membrane surfaces. Electron photomicrographs showed that by allowing 15 days for polymer to go completely into solution membranes with uniform hole-free surfaces were produced. Membranes formed from polymer solution with no waiting period, and with a 24 hour waiting period, had rough surfaces and many of them contained holes.

Following the waiting period, a membrane film is formed from the polymer solution as follows:

A glass plate is prepared by placing layers of masking tape along the four edges of the plate to form raised edges. Six layers of tape form a ridge about 2 mil high. The plate is then carefully cleaned. Next, the polymer solution is uncovered and placed in a chamber connected to the "house vacuum" system (16 inches Hg vacuum) for 30 minutes. This is done to de-gas the solution. The solution is then poured onto the glass plate and evenly distributed by drawing a glass rod across the plate while the rod rests on the masking tape. The glass plate is next placed in an electric drying oven at 120°C for 30 minutes. Following removal from the oven, the plate is allowed to cool to room temperature before the membrane is stripped off.

(5) Microscopic Examination of Membrane Surfaces

Each modified vinylidene fluoride membrane is checked for leaks or other defects by examining several areas of the membrane under a light microscope.

In order to get a better view of the membrane surface, and as a further check for leaks, small sample pieces of several of the membranes have been examined using a scanning electron microscope. Some samples taken from membranes after they had been tested were also viewed using the electron microscope.

(6) Test for the Presence of Residual Solvent Using Infrared Spectroscopy

A vinylidene fluoride membrane produced with no modifier was tested using an infrared spectrophotometer in order to check for the presence of residual dimethylformamide solvent. The carbonyl group in dimethylformamide produces strong absorption at a wavelength of 6.05 microns. Therefore, the presence of dimethylformamide could be detected by checking for absorption in this region. Samples which had been dried by heating for 24 hours in a vacuum chamber were also tested to check for residual solvent.

(7) Preparation For a Test Run

The following steps are taken before a test run is started:

i) The membrane is mounted in the test cell with the membrane surface that was in contact with the glass plate facing the high pressure side of the cell.

ii) The test cell is mounted into the constant temperature enclosure. Feed, exhaust, permeate and purge lines are connected to the cell. The thermister temperature probe and thermocouple are placed in the thermocouple well on the high pressure side of the membrane.

iii) The constant temperature enclosure is covered and its temperature is brought to the desired level by setting the temperature controller. A temperature recorder is used to

monitor temperature.

iv) Air is purged out of the permeate section of the apparatus by opening the valves controlling the flow of purge gas into the system. The free end of the permeate line is placed in an oil bath to provide a liquid seal. Purge gas is fed through the permeate system at a pressure of about 5 psig until chromatographic analysis of the gas in the permeate line indicates that no nitrogen is present. The flow of purge gas is then stopped by closing the block valve in the purge line.

(8) Test Run Procedure

A test run includes the following procedures:

i) The valve controlling the flow of feed gas into the system is opened and the micro-metering valve is adjusted to set the flow rate of feed gas at the desired value. A flow rate of 2 liters per hour is used in all runs.

ii) Oil is drawn into the permeate line by removing gas. This is done by inserting a .5 cc syringe into the septum in the permeate line and drawing out gas samples. Oil is drawn into the permeate line to a point as close as possible to the test cell.

iii) The permeation rate of gas is measured by timing the movement of oil out of the permeate line. These measurements are

recorded and used to compute permeate flux.

iv) Permeate samples are taken by inserting a .5 cc syringe into the septum in the permeate line and drawing out gas samples. The samples are analyzed using the calibrated gas chromatograph. When chromatograph output shows three samples to be the same and the measured permeate rate is constant, steady state is assumed.

Stern and his colleagues, using a similar apparatus, reported the accuracy of permeation measurements to be on the order of ±5% (66).

EXPERIMENTAL RESULTS AND DISCUSSION

A. MODIFIED VINYLIDENE FLUORIDE FILMS

(1) Materials Tested

Modifiers were chosen for testing primarily on the basis of H_2S solubility as demonstrated by use in H_2S absorption processes reported in the literature. It is also necessary that a modifier be soluble in dimethylformamide and have a boiling point high enough that it will not be driven off at the 120°C temperature used in the membrane drying step.

The following chemicals were tested as modifiers in vinylidene fluoride membranes in order to improve the membranes' permeation characteristics with respect to hydrogen sulfide:

- Sulfolene
- 3-Methyl sulfolene
- 1-Methyl-2-pyrrolidinone
- Morpholine
- Monoethanolamine
- Triethanolanime
- Diisopropanolamine
- Monoisopropanolamine

All membranes are formed from dimethylformamide solutions with a modifier concentration of 10 weight percent used for all films except those containing sulfolene. 12 weight percent sulfolene is used.

The membrane solution is allowed to stand for 15 days before casting to insure complete solution of the vinylidene fluoride polymer in the solvent. Membrane solutions are de-gassed by being

placed in a vacuum chamber at 16 inches Hg vacuum for 30 minutes.

Films are formed by pouring the polymer solution onto a glass plate, the edges of which have been raised with layers of masking tape, and placing the plate in an oven for 30 minutes at 120°C to drive off the solvent.

(2) Results of Microscopic Analysis

At the start of the project several membranes were made up by dissolving vinylidene fluoride and modifier in the solvent by heating the mixture on a hot-plate and pouring the solution onto a prepared glass plate as soon as a homogeneous polymer solution was formed. Results of test runs made using these membranes were very inconsistent. Different membranes with the same composition gave vastly different test results.

To aid in explaining membrane behavior, surface characteristics were checked using a scanning electron microscope. Exxon Research and Development Company (Baytown, Texas) provided electron photomicrographs of a vinylidene fluoride film modified with 15% sulfolene. Figure V-1 is a surface view of the film magnified 500x and Figure V-2 is a cross section view at 600x magnification. As can be clearly seen in the photomicrographs, the membrane surface is very uneven and contains multiple holes. The cross section view shows that the holes extend through the membrane. The largest hole in Figure V-1 has a longest side length of about 2.6×10^{-3} cm (2.6×10^{5} angstroms). This is several

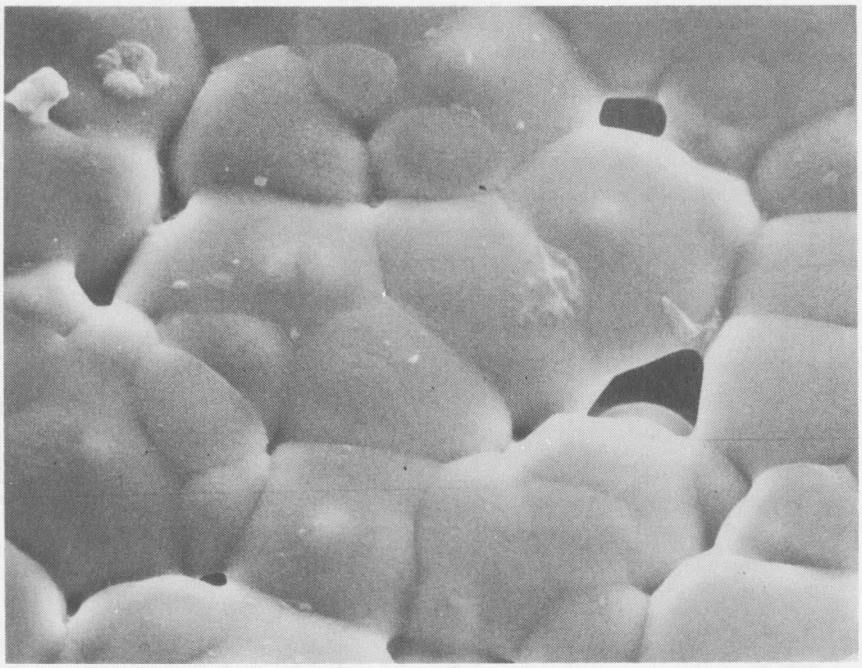

FIGURE V-1. SURFACE VIEW OF MEMBRANE CONTAINING 15% SULFOLENE AT 500 x MAGNIFICATION - MEMBRANE FORMED IMMEDIATELY FROM POLYMER SOLUTION

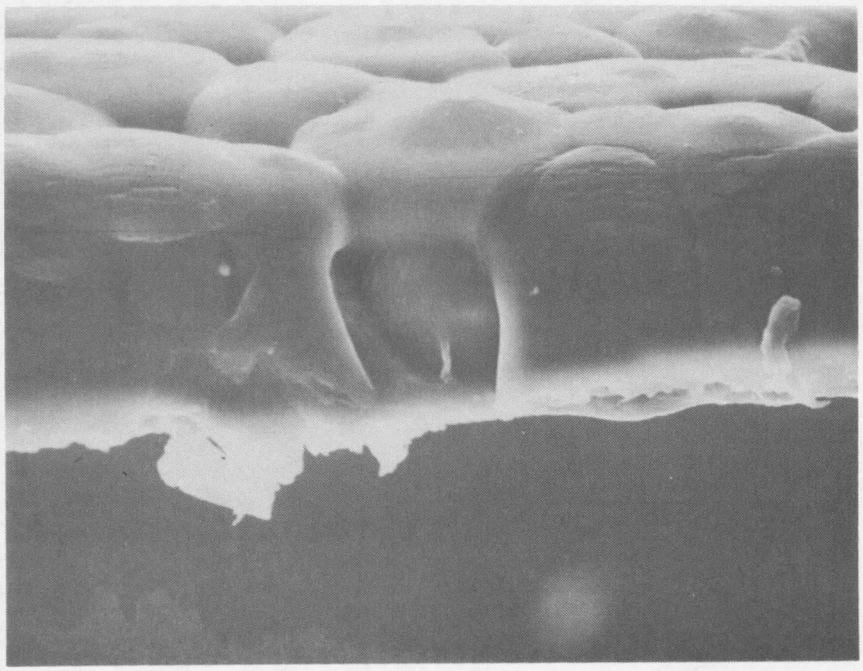

FIGURE V-2. CROSS SECTION OF MEMBRANE CONTAINING 15% SULFOLENE AT 600x MAGNIFICATION - MEMBRANE FORMED IMMEDIATELY FROM POLYMER SOLUTION

orders of magnitude larger than the size of H_2S and N_2 molecules (around 10 angstroms).

Even with the obvious holes present, these membranes had not leaked, but had held gas at a pressure of 500 psig. There are two possible explanations for this fact. First, it is possible that the high vacuum present in the electron microscope causes residual solvent to boil off, leaving holes in the polymer structure. Thus, holes that are not present when the films are tested can be found when electron photomicrographs are made. Second, it is possible that under high pressure the thick areas of the membrane are compressed, closing off the holes. This phenomenon would leave a nonuniform surface which could account for the inconsistent initial separation results.

It was assumed that the electron microscope vacuum did not cause the holes, because checks of samples with a light microscope showed no differences between samples which had been tested with the electron microscope and those which had not.

Two main possible causes for the holes are present. First, due to the very slow rate at which polymers go into solution, it is possible that polymer swelling in the solvent had occurred but that solution wasn't complete when the membranes were cast. The upper surface shown in Figure V-2 appears to be composed of polymer spheres loosely joined together. This could be due to incomplete solution. That is, the membrane may be formed from many separate masses of swollen polymer

joined together. Second, gases trapped in the polymer solution during stirring and pouring would be driven off in the drying step. Perhaps this boiling-off of trapped gas results in holes in the membrane.

In an attempt to eliminate these effects, membrane solutions were allowed to stand for 24 hours before pouring to allow time for all the polymer to go into solution, and membrane solutions were de-gassed by being placed in a vacuum chamber at 16 inches Hg vacuum for 30 minutes just before the membranes were cast. Electron photomicrographs were made on several membranes formed in this manner. Figure V-3 is a surface view of a membrane modified with 12% sulfolene. While there are two small holes present, it should be noted that there are also several depressions in the surface which clearly do not extend all the way through the membrane. The membrane surface also appears more uniform than that shown in Figure V-1. Figure V-4 shows a membrane modified with 10% diisopropanolamine at 700x. Again, holes are present, but their size is much smaller than those found in Figure V-1. No holes are present in a surface photomicrograph of a membrane containing 10% 1-methyl-2-pyrrolidinone at a magnification of 400x (Figure V-5). A view of a membrane containing 5% triethanolamine modifier at a magnification of 700x is shown in Figure V-6. Again, no holes are present and the surface appears quite uniform.

The steps which had been taken to improve the membrane surface characteristics appear to have been partially successful. By allowing

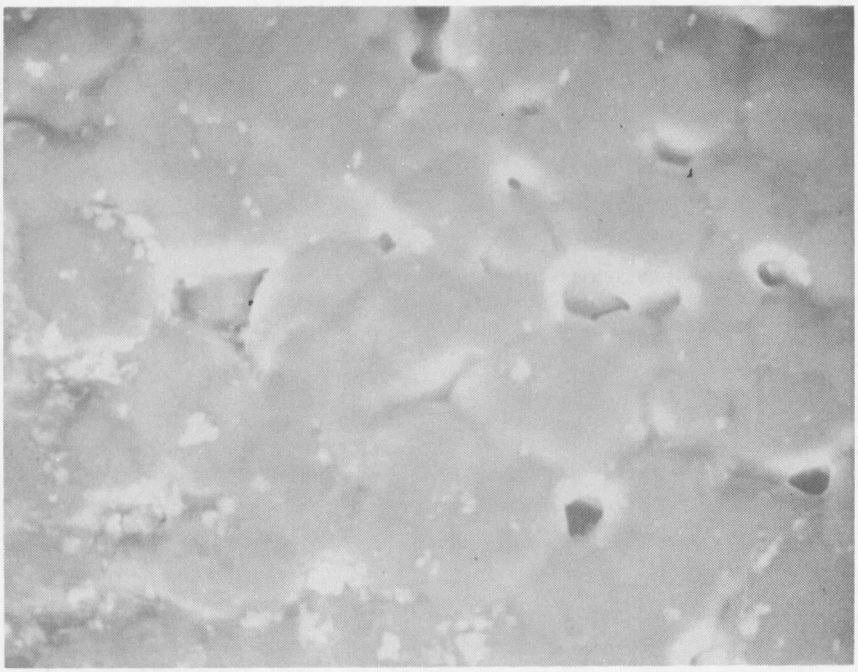

FIGURE V-3. SURFACE VIEW OF MEMBRANE MODIFIED WITH 12% SULFOLENE AT 400x MAGNIFICATION - POLYMER SOLUTION DE-GASSED FOLLOWING A 24 HOUR SOLUTION PERIOD